WORKSHOP MANUAL

NPR,NQR

AUTOMATIC TRANSMISSION

450-43LE

SECTION 7

ISUZU

ISUZU

International Service & Parts

Tokyo, Japan

NOTICE

Before using this Workshop Manual to assist you in performing vehicle service and maintenance operations, it is recommended that you carefully read and thoroughly understand the information contained in Section 0A under the headings "GENERAL REPAIR INSTRUCTIONS" and "HOW TO USE THIS MANUAL".

All material contained in this Manual is based on latest product information available at the time of publication.
All rights are reserved to make changes at any time without prior notice.

Applicable Model : NPR70,NQR70

This manual is applicable to 1999 year model and later vehicles.

THIS MANUAL INCLUDES THE FOLLOWING SECTIONS:

SECTION NO.	CONTENTS
7A 1	Construction and Function
7A 2	Diagnosis
7A 3	On-Vehicle Service
7A 4	Automatic Transmission Overhaul

SECTION 7A

AUTOMATIC TRANSMISSION

NOTICE: When fasteners are removed, always reinstall them at the same location from which they were removed. If a fastener needs to be replaced, use the correct part number fastener for that application. If the correct part number fastener is not available, a fastener of equal size and strength (or stronger) may be used. Fasteners that are not reused, and those requiring thread locking compound will be called out. The correct torque value must be used when installing fasteners that require it. If the above conditions are not followed, parts or system damage could result.

CONTENTS

SUBJECT **PAGE**

Construction and Function 7A1
Diagnosis 7A2
On-Vehicle Service 7A3
Automatic Transmission Overhaul 7A4

7A1 CONSTRUCTION AND FUNCTION

CONTENTS

SUBJECT	PAGE
Description	7A1- 3
Construction	7A1- 3
Transmission Serial Number	7A1- 4
Number Plate Location	7A1- 4
Component Location	7A1- 5
Structure and Function of Component	7A1- 6
Torque Converter	7A1- 6
Oil Pump	7A1- 6
Shaft	7A1- 7
Gear Shifting Mechanism	7A1- 8
Accumulator	7A1-16
Solenoid	7A1-17
Automatic Transmission Fluid (ATF) Thermosensor	7A1-18
Automatic Transmission Fluid (ATF) Temperature Switch	7A1-18
Inhibitor Switch (Neutral/Start Switch)	7A1-18
Kick-down Switch	7A1-19
Throttle Position Sensor	7A1-19
Vehicle Speed Sensor 1	7A1-20
Vehicle Speed Sensor 2	7A1-20
Engine Speed Sensor	7A1-21
Transmission Control Module (TCM)	7A1-21
Control Mechanism	7A1-22
Content of Function and Control	7A1-22
Control Item, Input and Output	7A1-23
Major Input/Output Component Function	7A1-24
Control Circuit Block Diagram	7A1-25
Circuit Diagram	7A1-26
Valve Operation	7A1-28
Valve Function	7A1-28
Valve Body Construction	7A1-30
Gear Train (Transmission Mechanism) Operation	7A1-31
Construction and Operation	7A1-31
Component Name and Function	7A1-32
Component and Their Operating Condition	7A1-32
N and P ranges	7A1-33
First Gear in D or 2 Range	7A1-34
Second Gear in D Range	7A1-35
Third Gear in D, 2, L Range	7A1-37
Overdrive Gear in D Range	7A1-39
Second Gear in 2 Range	7A1-40
First Gear in L Range	7A1-42
R Range	7A1-43

DESCRIPTION

CONSTRUCTION

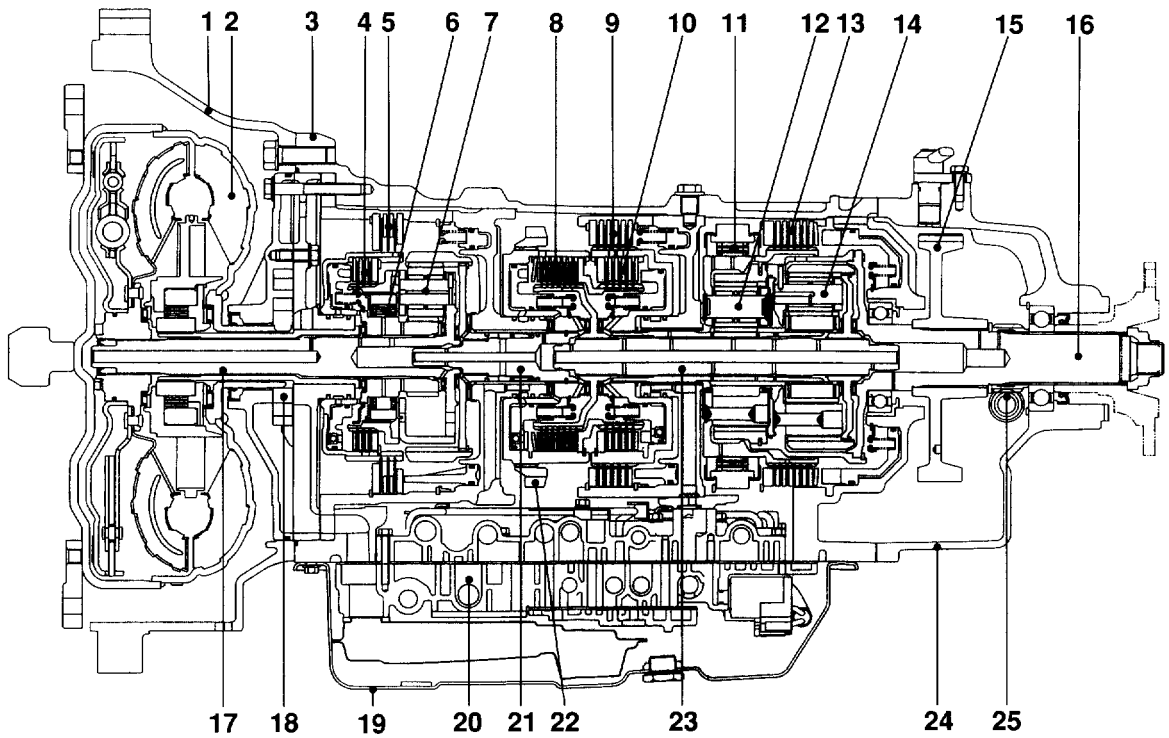

1. Torque Converter Housing
2. Torque Converter
3. Transmission Case
4. Overdrive Direct Clutch
5. Overdrive Brake
6. Overdrive One-way Clutch
7. Overdrive Planetary Gear
8. Front Clutch
9. 2nd Brake
10. Rear Clutch
11. Front Planetary Gear
12. No.2 One-way Clutch
13. 1st and Reverse Brake
14. Rear Planetary Gear
15. Parking Lock Gear
16. Output Shaft
17. Overdrive Input Shaft
18. Oil Pump
19. Oil Pan
20. Valve Body
21. Input Shaft
22. PTO Drive Gear
23. Intermediate Shaft
24. Extension Housing
25. Speedometer Drive Gear

Figure 1. Construction of Automatic Transmission

The 450-43LE type automatic transmission is a four-speed automatic gear shift that is controlled electronically by the Transmission Control Module (TCM).

The TCM provides smooth and powerful driving performance by automatically selecting the optimum transmission characteristics and gear positions according to the accelerator (throttle) position, vehicle speed, and other conditions.

In an event of a malfunction of the vehicle speed sensor, throttle position sensor, solenoid or other components, it shifts to fail-safe control mode to maintain the drivability. In an event of a malfunction of the vehicle speed sensor, throttle position sensor, solenoid, engine rpm signal, etc., the TCM's self-diagnosis function allows faster troubleshooting to enhance the vehicle's serviceability.

The automatic transmission consists of the torque converter, oil pump, gear train, and valve bodies.

The torque converter is of the 3-element, 1-stage, and 2-phase type with a built-in lock-up clutch.

The gear train consists of 3 sets of multiple-plate clutches, 3 sets of multiple-plate brakes, 2 one-way clutches, and 3 sets of planetary gear each consisting of a sun gear, a pinion gear, and a ring gear.

TRANSMISSION SERIAL NUMBER

NUMBER PLATE LOCATION

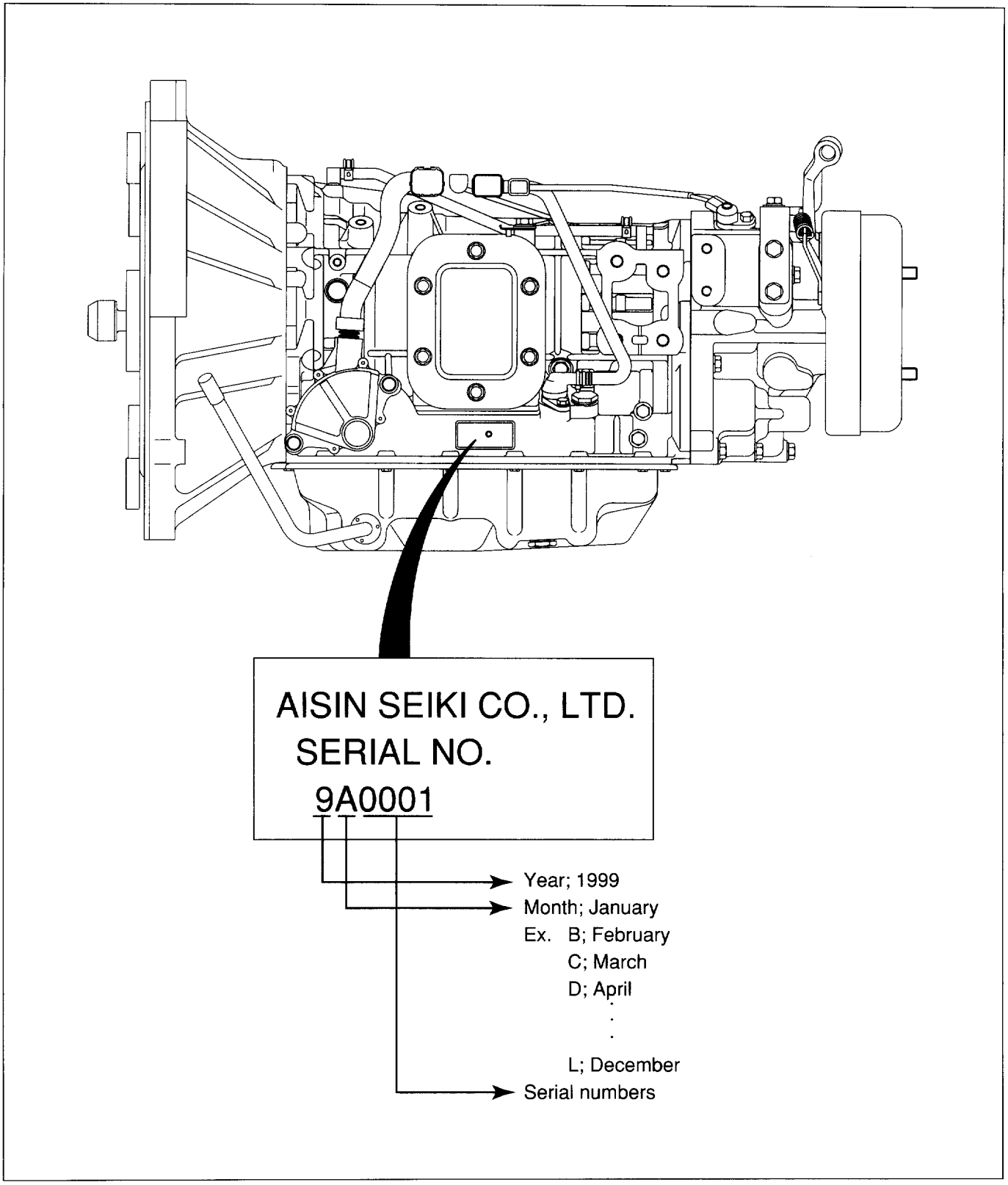

Figure 2. Number Plate Location

COMPONENT LOCATION

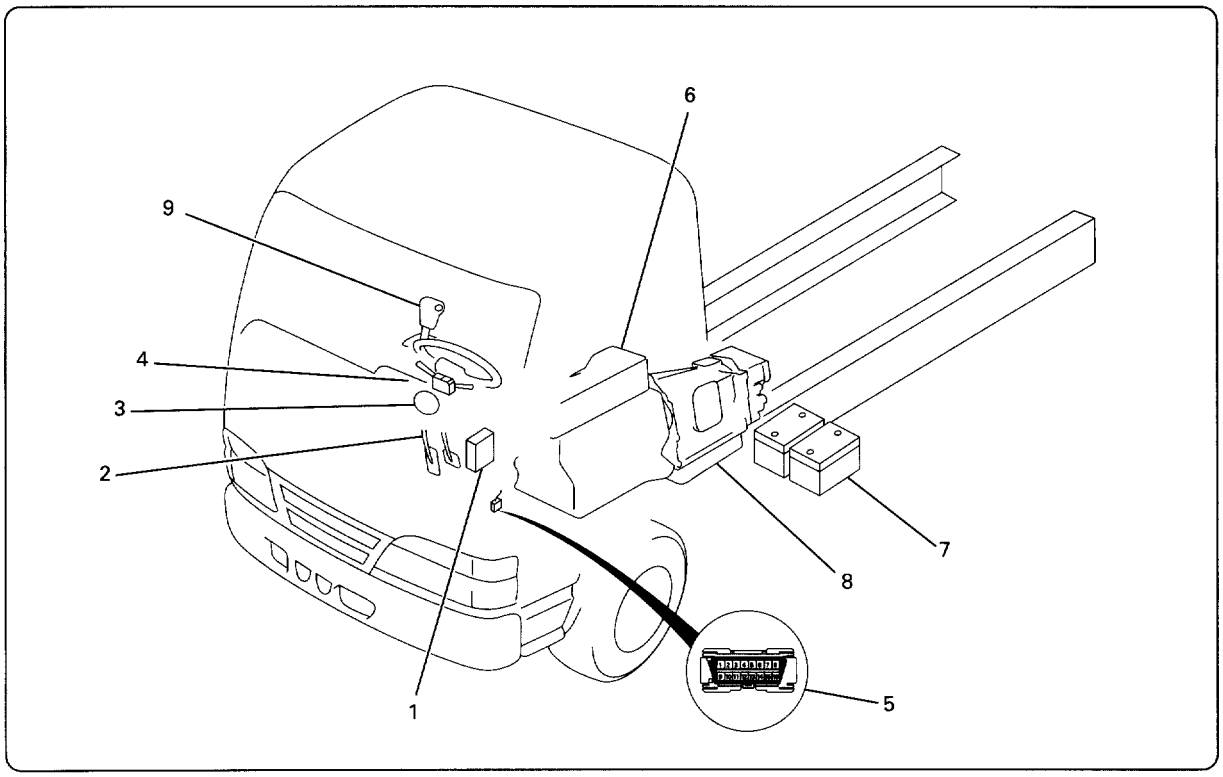

2. Pedal
- Throttle position sensor
- Kick down switch
- Brake switch

3. Speedometer
- Vehicle speed sensor-2

4. Instrument panel
- Exhaust brake switch

- Check trans light
- ATF temperature light

5. Data link connector
- Diagnostic enable
- TECH 2

1. Transmission Control Module (TCM)

6. Engine
- Engine speed sensor
- Idle signal(from PCM)
- FICD signal

- Exhaust brake cut relay

7. Electrical source
- Ignition

8. Transmission
- No. 1 shift solenoid
- No. 2 shift solenoid
- Line pressure solenoid
- Lock-up solenoid
- Timing solenoid

- Vehicle speed sensor-1
- ATF thermosensor
- ATF thermo switch
- Inhibitor switch

9. Control lever
- Overdrive OFF switch

: Signal direction

Figure 3. Component Location

STRUCTURE AND FUNCTION OF COMPONENT

TORQUE CONVERTER

(Figure 4)

- The torque converter transmits the engine torque to the transmission by way of oil (when the lock-up clutch is disengaged) or the lock-up piston (when the lock-up clutch is engaged).
- The torque converter is of the 3-element, 1-stage, and 2-phase type.
- "1-stage" means the output element consists of a single turbine runner.
  "2-phase" means the converter works as a torque converter against the pump impeller when the turbine runner speed is relatively low, and as a fluid coupling when the speed is high.

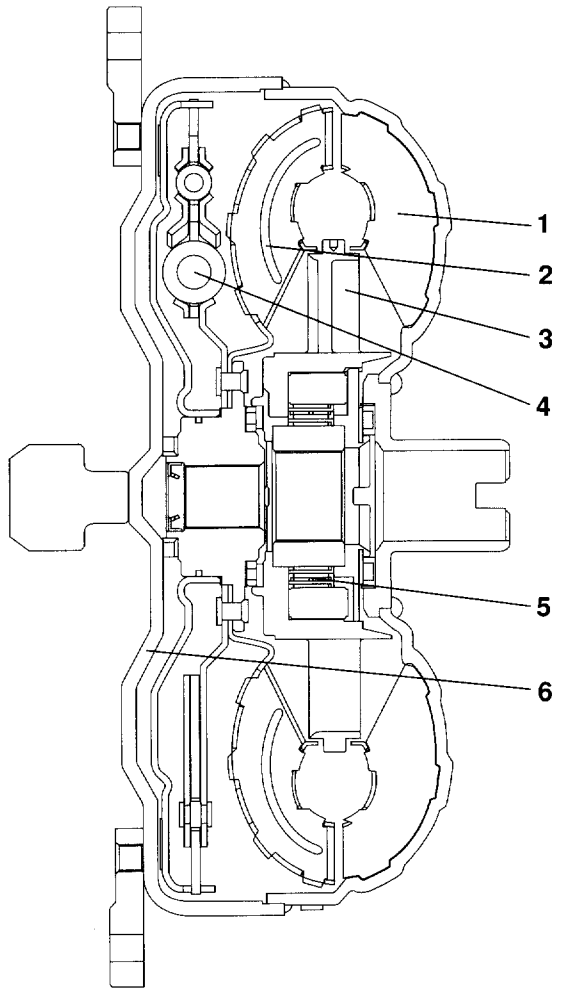

1. Pump Impeller
2. Turbine Runner
3. Stator
4. Lock-up Clutch
5. One-way Clutch
6. Converter Front Cover

Figure 4. Torque Converter

OIL PUMP

(Figure 5)

Construction

- The oil pump is a high performance geared oil pump with a small number of teeth of a special profile.

Viewed from Rear Side:

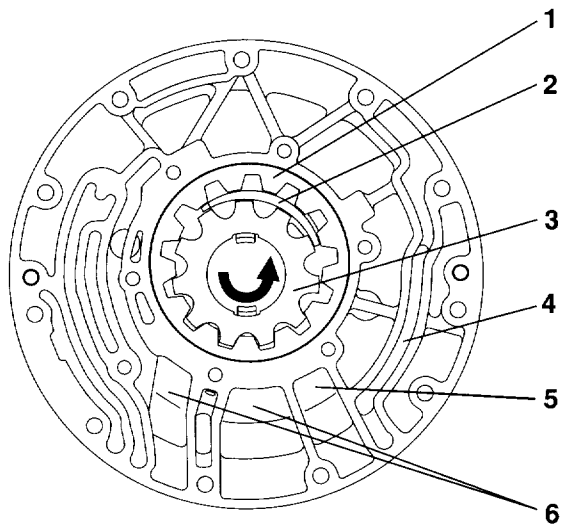

1. Driven Gear
2. Cresent
3. Drive Gear
4. Oil Pump Body
5. Delivery Port
6. Suction Port

Figure 5. Construction of Oil Pump

Operation

- The drive gear is engaged with the extension sleeve of the torque converter. As it rotates in the direction of the arrow at the engine speed, the oil is drawn in and compressed before exiting from the delivery port.

SHAFT

(Figure 6)

Overdrive (O/D) input shaft

- The O/D input shaft (O/D planetary gear) is engaged with the turbine runner and the lock-up piston inside the torque converter. Therefore, the driving force of the engine reaching the torque converter is transmitted to the O/D planetary gear.
  The oil hole (A) inside the O/D input shaft serves as the torque converter operating pressure supply passage when the lock-up clutch is disengaged. It also serves as the lubricant supply passage to all parts.

Input shaft

- The input shaft transmits the driving force from the O/D planetary gear to the front clutch.
  The oil hole (B) inside the input shaft is used to supply the oil, cooled by the oil cooler, to all parts as the lubricant.

Intermediate shaft

- The intermediate shaft transmits the driving force from the front clutch to the rear planetary gear.
  The oil passage (C) inside the intermediate shaft is used to supply the oil to all parts as the lubricant.

Output shaft

- The output shaft transmits the driving force reaching the front and rear planetary gears to the propeller shaft. The output shaft is engaged with the front planetary ring gear and the rear planetary carrier. The parking gear, which is used to fix the output shaft and detect rotation, is also engaged by way of spline.
  The oil passage (D) inside the output shaft is used to supply the lubricant to all parts.

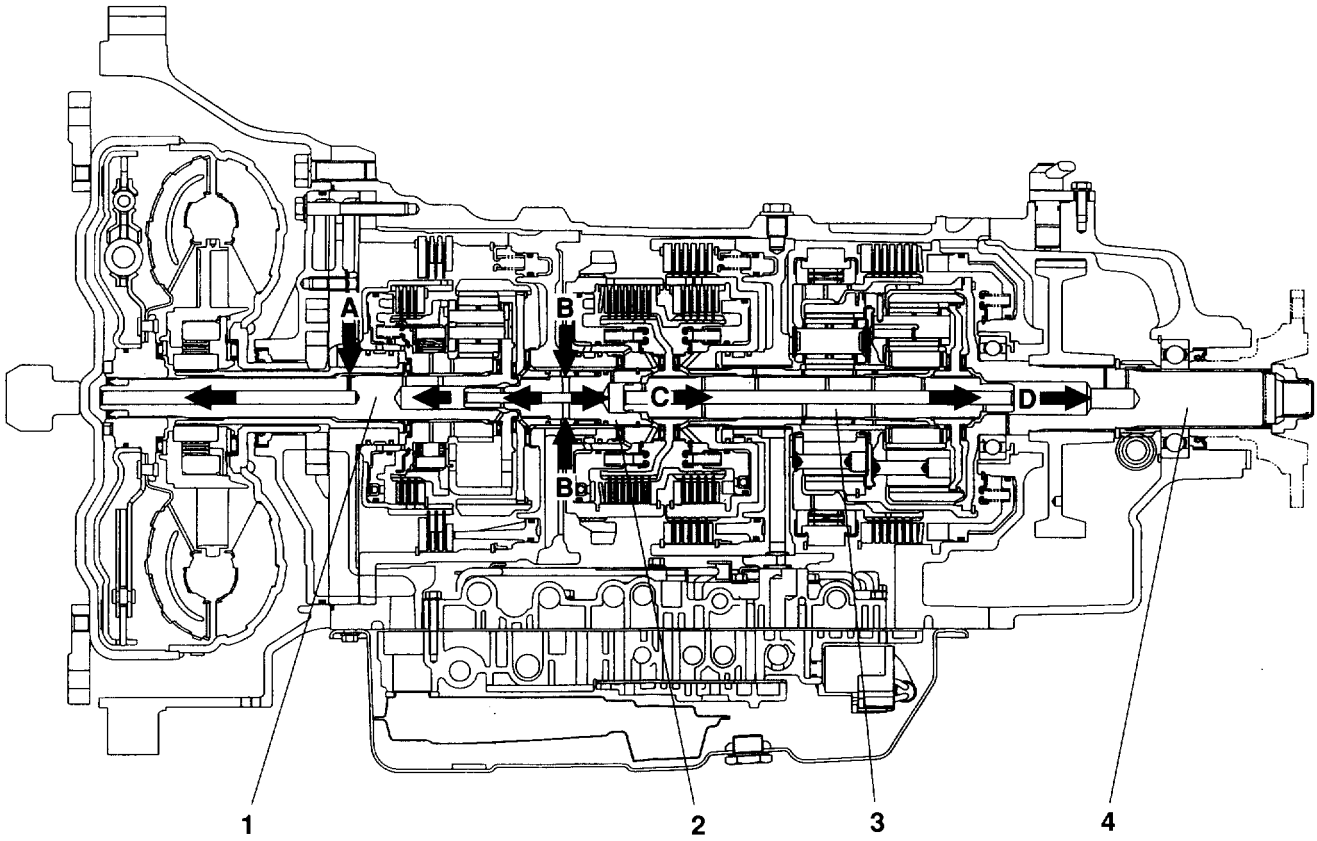

1. Overdrive Input Shaft
2. Input Shaft
3. Intermediate Shaft
4. Output Shaft

Figure 6. Shaft

GEAR SHIFTING MECHANISM

- The 450-43LE type transmission combines three sets of planetary gears, three sets of multi-plate clutches and multi-plate brakes, and two sets of one-way clutches to achieve forward (4 speeds) and backward (1 speed) gear shifting.

Principle of gear shifting

- The automatic transmission uses three sets of planetary gears unlike the parallel gears that are used in the manual transmission.
- Planetary gears have the advantage of a compact configuration because of the way they are constructed with a single central shaft (one axis).
- Also, unlike the manual transmission gears that require changing of gear mesh, the gear ratio of the planetary gears can be changed more easily by locking, releasing or rotating only some of their parts.
- A planetary gear is made up of a sun gear at its center and pinion gears each of which rotates about its own center and also along the sun gear.
- Also, since the pinion gears are further supported by the planetary carrier, they rotate as a unit in the same direction and at the same rate.
- As shown in the figure, each planetary gear is constructed of three elements; a sun gear, pinion gears, a ring gear, and a planetary carrier.
  Gear shifting is achieved by conditioning two of the three elements, namely the sun gear, internal gear, and the planetary carrier.
- The planetary gears are locked by the clutch, brake, and one-way clutch, according to the gear shifting.

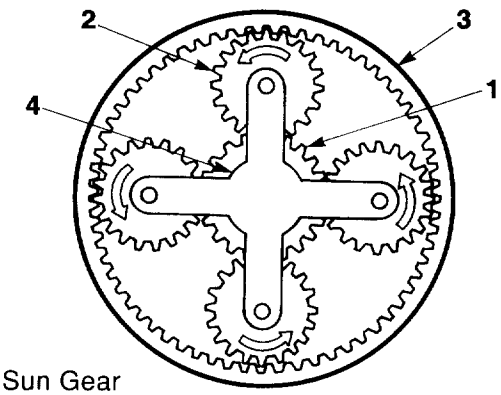

1. Sun Gear
2. Pinion Gear
3. Ring Gear
4. Planetary Carrier

Figure 7. Planetary Gear

Overdrive Direct Clutch

(Figure 8)

When engaged

- The operating pressure (A), switched by the control valve, acts on the O/D direct clutch piston (3) to connect the clutch disk (8) and clutch plate (7). This also connects the O/D sun gear (11) and O/D planetary carrier (12). As the result, the entire O/D planetary gear works as a unit to transmit the engine torque from the O/D input shaft (13) to the input shaft (14).

When disengaged

- Since the operating pressure is not sent to the O/D direct clutch piston (3) when disengaging it, the clutch piston is returned by the return spring (5).
- The clutch plate (7) separates from the clutch disk (8) cutting the power transmission.

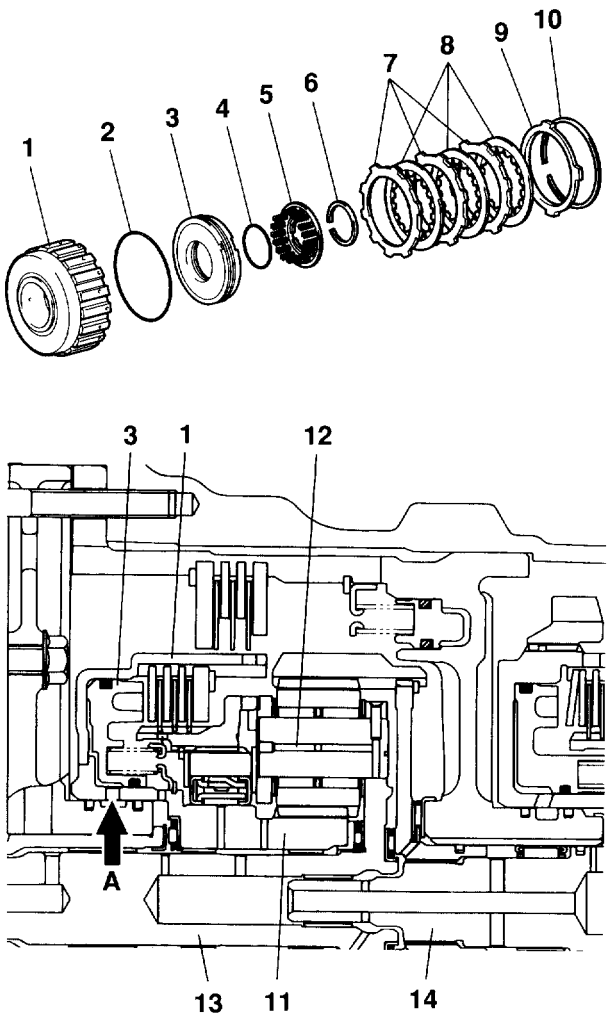

1. O/D Direct Clutch Drum
2. O-ring
3. O/D Direct Clutch Piston
4. O-ring
5. O/D Direct Clutch Return Spring
6. Snap Ring
7. Clutch Plate
8. Clutch Disc
9. Clutch Flange
10. Snap Ring
11. O/D Planetary Sun Gear
12. O/D Planetary Carrier
13. O/D Input Shaft
14. Input Shaft

A. Operating Pressure

Figure 8. Overdrive Direct Clutch

Front Clutch

(Figure 9)

When engaged

- The operating pressure (A), switched by the control valve, acts on the front clutch piston (4) to connect the clutch disk (9) and clutch plate (8). As the result, the engine torque is transmitted from the input shaft (15) to the front clutch hub (12).

When disengaged

- Since the operating pressure is not sent to the front clutch piston (4) when disengaging it, the clutch piston is returned by the return spring (5).
- The clutch plate (8) separates from the clutch disk (9) cutting the power transmission.

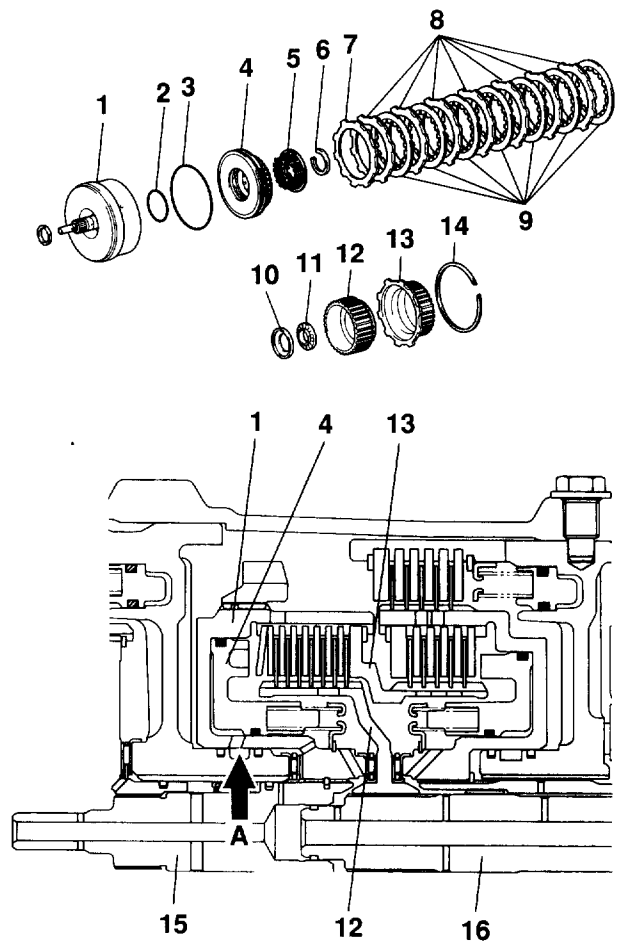

1. Front Clutch Drum
2. O-ring
3. O-ring
4. Front Clutch Piston
5. Front Clutch Return Spring
6. Snap Ring
7. Clutch Cushion Plate
8. Clutch Plate
9. Clutch Disk
10. Thrust Bearing Race
11. Thrust Bearing
12. Front Clutch Hub
13. Rear Clutch Hub
14. Snap Ring
15. Input Shaft
16. Intermediate Shaft

A. Operating Pressure

Figure 9. Front Clutch

Rear Clutch

(Figure 10)

When engaged

- The operating pressure (A), switched by the control valve, acts on the rear clutch piston (7) to connect the clutch disk (3) and clutch plate (4). As the result, the engine torque is transmitted from the front clutch hub (12) to the front sun gear (11).

When disengaged

- Since the operating pressure is not sent to the rear clutch piston (7) when disengaging it, the clutch piston is returned by the return spring (6).
- The clutch plate (4) separates from the clutch disk (3) cutting the power transmission.

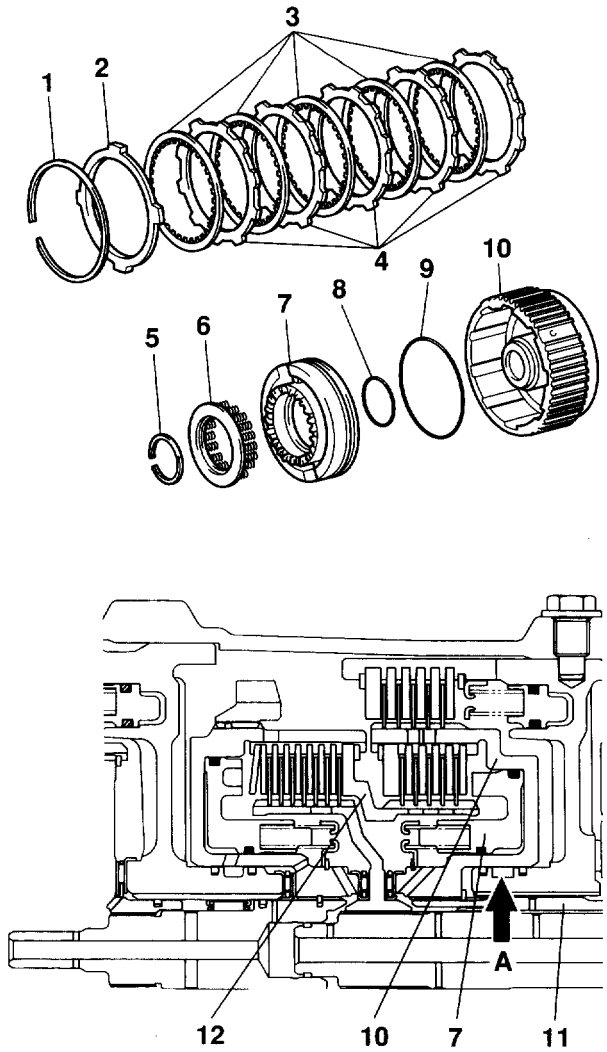

1. Snap Ring
2. Clutch Flange
3. Clutch Disk
4. Clutch Plate
5. Snap Ring
6. Rear Clutch Piston Return Spring
7. Rear Clutch Piston
8. O-ring
9. O-ring
10. Rear Clutch Drum
11. Front Planetary Sun Gear
12. Rear Clutch Hub

A. Operating Pressure

Figure 10. Rear Clutch

Overdrive Brake

(Figure 11)

When engaged

- The operating pressure (A), switched by the control valve, acts on the O/D brake piston (8) to connect the clutch disk (3) and brake plate (4 and 5). This also locks the O/D direct clutch (12) to the O/D case (11). As the result, the O/D planetary sun gear (13) is locked in position.

When disengaged

- Since the operating pressure is not sent to the O/D brake piston (8) when disengaging it, the clutch piston is returned by the return spring (7).
- The brake plate (4 and 5) separates from the clutch disk (3) cutting the power transmission.

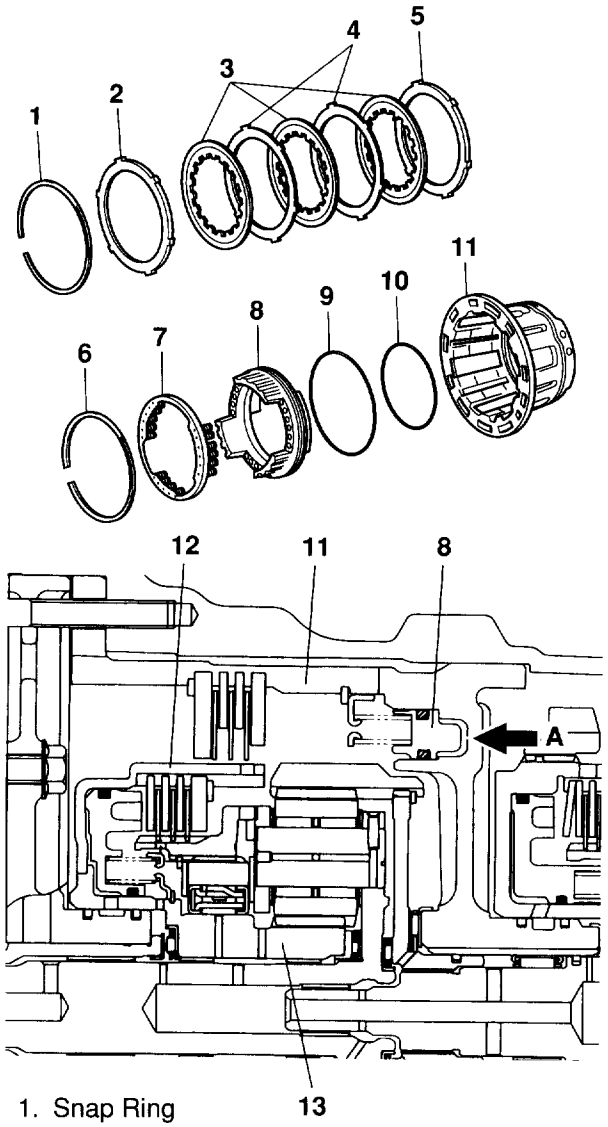

1. Snap Ring
2. Brake Flange
3. Clutch Disk
4. Brake Plate
5. Brake Plate
6. Snap Ring
7. O/D Brake Return Spring
8. O/D Brake Piston
9. O-ring
10. O-ring
11. O/D Case
12. O/D Direct Clutch
13. O/D Planetary Sun Gear

A. Operating Pressure

Figure 11. Overdrive Brake

2nd Brake

(Figure 12)

When engaged

- The operating pressure (A), switched by the control valve, acts on the brake piston No. 1 (7) to connect the clutch disk (3) and brake plate (4). This also locks the rear clutch (11) to the center support (10).

When disengaged

- Since the operating pressure is not sent to the brake piston No. 1 (7) when disengaging it, the brake piston is returned by the return spring (6).
- The brake plate (4) separates from the clutch disk (3) cutting the power transmission.

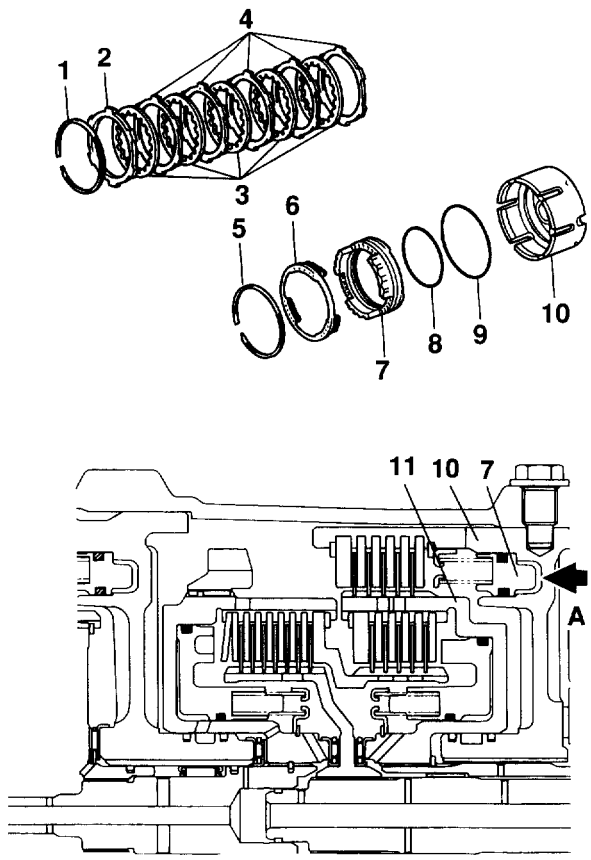

1. Snap Ring
2. Brake Flange
3. Clutch Disk
4. Brake Plate
5. Snap Ring
6. 2nd Brake Return Spring
7. Brake Piston No. 1
8. O-ring
9. O-ring
10. Center Support
11. Rear Clutch

A. Operating Pressure

Figure 12. 2nd Brake

1st and Reverse Brake

(Figure 13)

When engaged

- The operating pressure (A), switched by the control valve, acts on the 1st and reverse brake piston (8) to connect the clutch disk (3) and brake plate (5). This also locks the 1st and reverse brake hub (11) to the transmission case (12). As the result, the front planetary carrier (13) is locked in position.

When disengaged

- Since the operating pressure is not sent to the 1st and reverse brake piston (8) when disengaging it, the brake piston is returned by the return spring (7).
- The brake plate (5) separates from the clutch disk (3) cutting the power transmission.

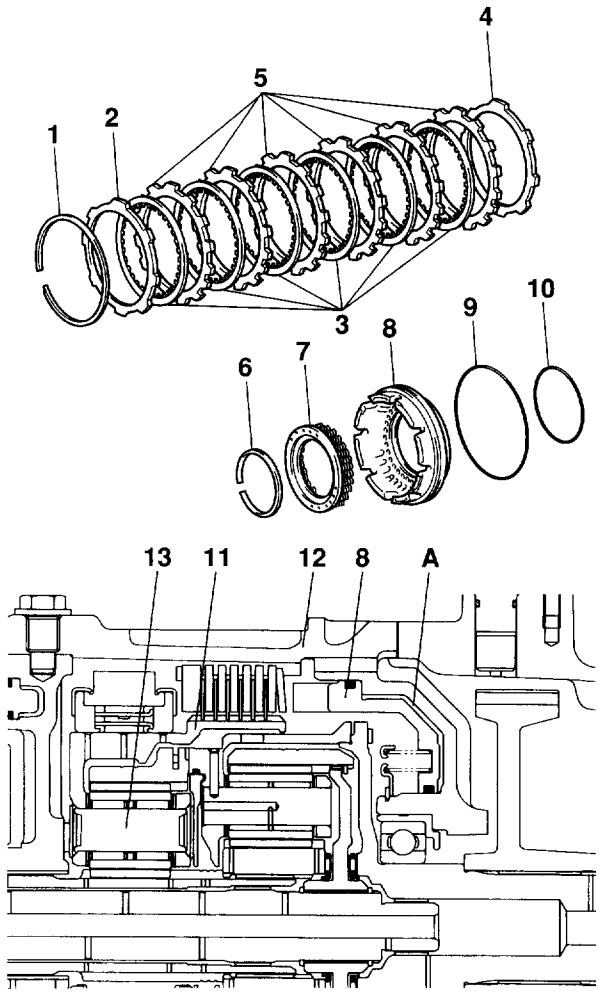

1. Snap-Ring
2. Brake Flange
3. Clutch Disk
4. Brake Cushion Plate
5. Brake Plate
6. Snap Ring
7. 1st and Reverse Brake Return Spring
8. 1st and Reverse Brake Piston
9. O-ring
10. O-ring
11. 1st and Reverse Brake Hub
12. Transmission Case
13. Front Planetary Carrier

A. Operating Pressure

Figure 13. 1st and Reverse Brake

Planetary Gear

(Figure 14)

- Three sets of Simpson type planetary gears are used to achieve the total of five gear ratios including 4 forward and 1 backward ratios.

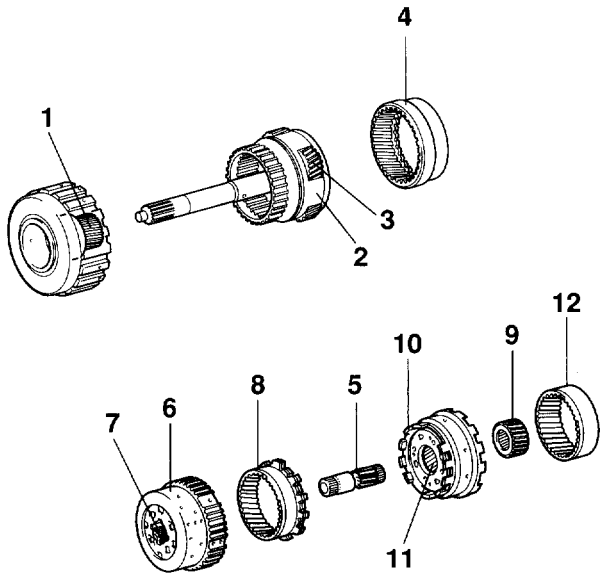

1. O/D Sun Gear
2. O/D Planetary Carrier
3. O/D Pinion Gear
4. O/D Ring Gear
5. Front Sun Gear
6. Front Planetary Carrier
7. Front Pinion Gear
8. Front Ring Gear
9. Rear Sun Gear
10. Rear Planetary Carrier
11. Rear Pinion Gear
12. Rear Ring Gear

Figure 14 Planetary Gear

Overdrive (O/D) One-way clutch

(Figure 15)

- The O/D one-way clutch is locked during acceleration in 1st, 2nd or 3rd speed to maintain the O/D sun gear fixed to the O/D planetary carrier.
- The O/D one-way clutch idles in 4th speed.

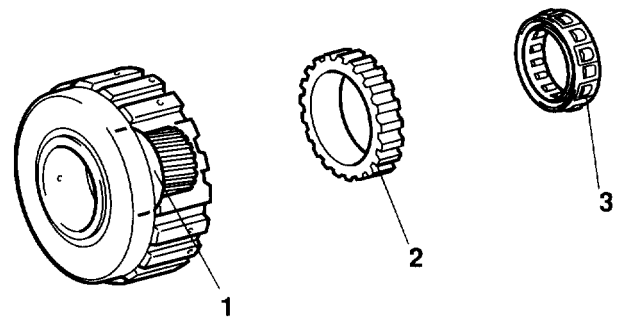

1. O/D Direct Clutch Drum and O/D One-way Clutch Inner Race
2. O/D One-way Clutch Outer Race
3. O/D One-way Clutch

Figure 15 O/D One-way Clutch

One-way Clutch No.2

(Figure 16)

- The one-way clutch No.2 is locked during acceleration in 1st speed to fix the front planetary carrier.
- It idles in 2nd, 3rd and 4th speeds.

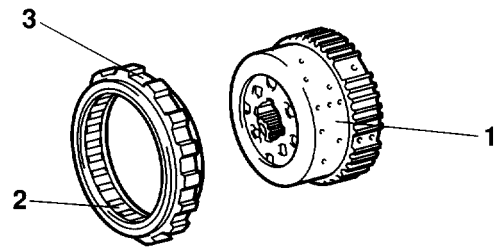

1. Front Planetary Carrier and One-way Clutch No. 2 Inner Race
2. One-way Clutch No. 2
3. One-way Clutch No. 2 Outer Race

Figure 16 One-way Clutch No.2

ACCUMULATOR

- The accumulator helps a smooth increase of the operating pressure in the respective friction element to ease the gear shifting shock.
- During a gear shift, the accumulator control pressure regulated by the respective accumulator control valve is applied to the back of the accumulator to ease the gear shifting shock.

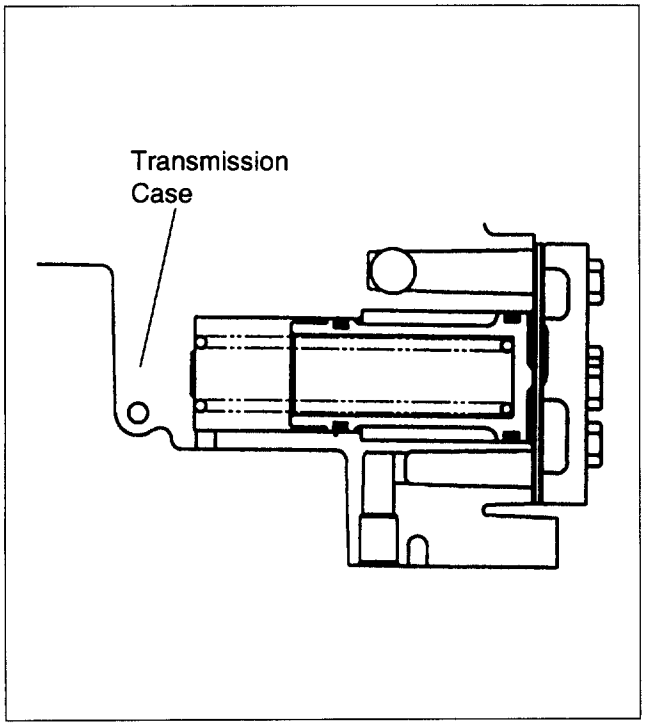

Figure 17. Front Clutch Accumulator

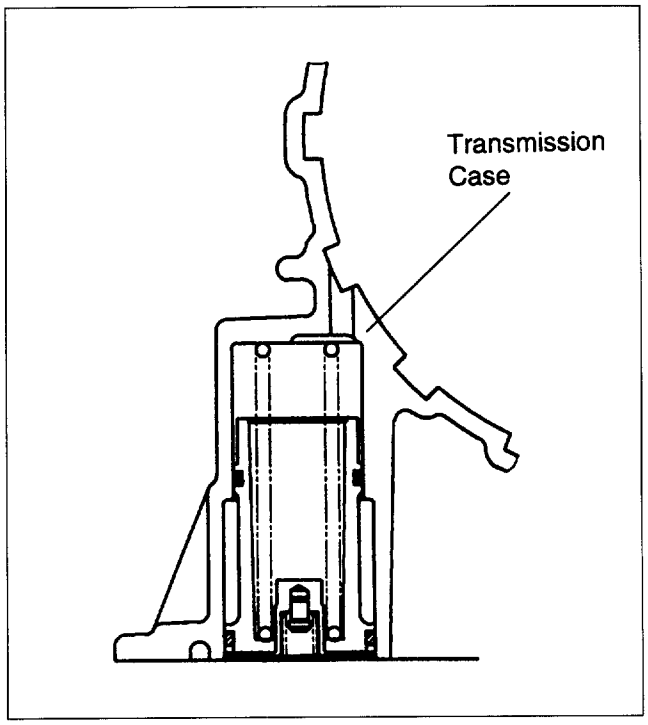

Figure 18. Rear Clutch Accumulator

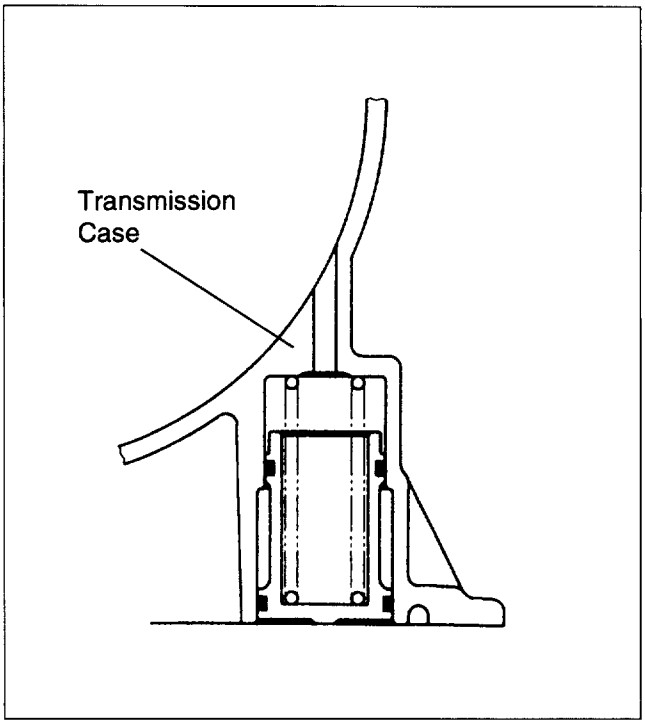

Figure 19. Overdrive Brake Accumulator

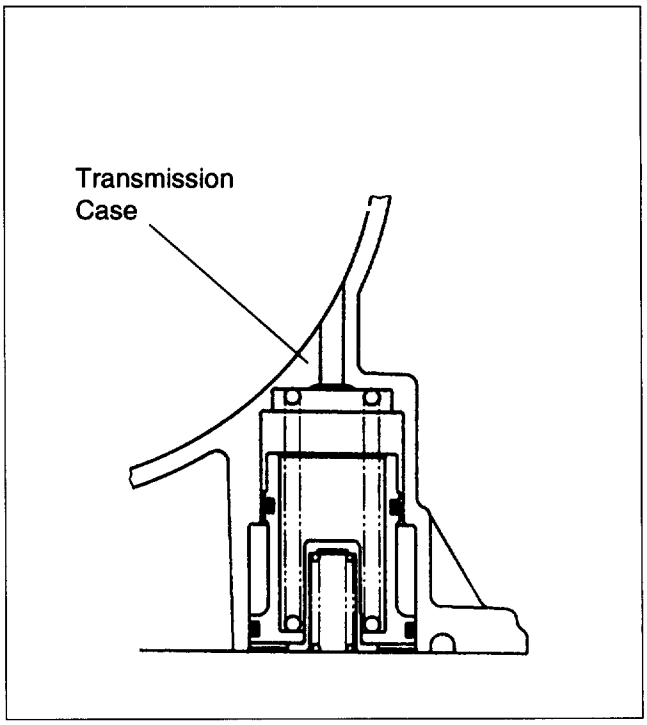

Figure 20. 2nd Brake Accumulator

SOLENOID

No.1 and No.2 Shift Solenoids

(Figure 21)

- These solenoids are fitted in the lower part of the valve body. They are turned on or off by a signal from the TCM to control the gear shifting.
- The ON/OFF combinations of the two solenoids are used to control the gear position as shown below.

Gear Position / Solenoid	1st gear	2nd gear	3rd gear	4th gear
No.1 shift solenoid	ON	ON	OFF	OFF
No.2 shift solenoid	OFF	ON	ON	OFF

Timing Solenoid

(Figure 21)

- This solenoid is fitted in the lower part of the valve body. It is turned on or off by a signal from the TCM to control the timing during 2nd and 3rd gear shifting.

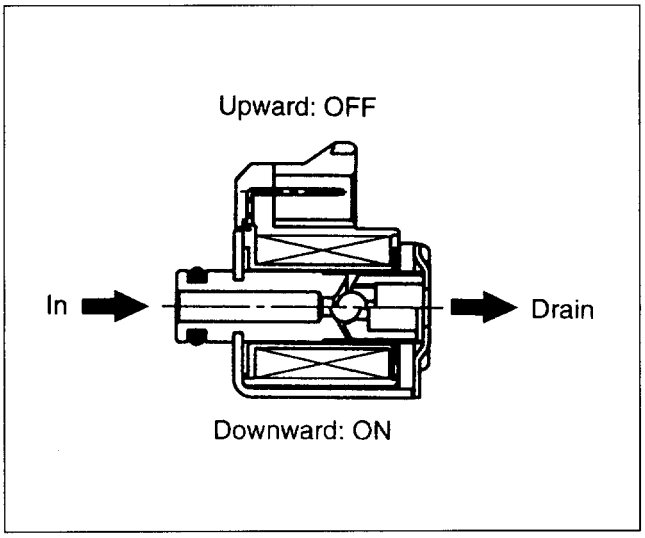

Figure 21. No.1, No.2 Shift Solenoids and Timing Solenoid

Lock-up solenoid

(Figure 22)

- This solenoid is fitted in the lower part of the valve body. It controls the lock-up oil pressure by a signal from the TCM according to the duty cycle.

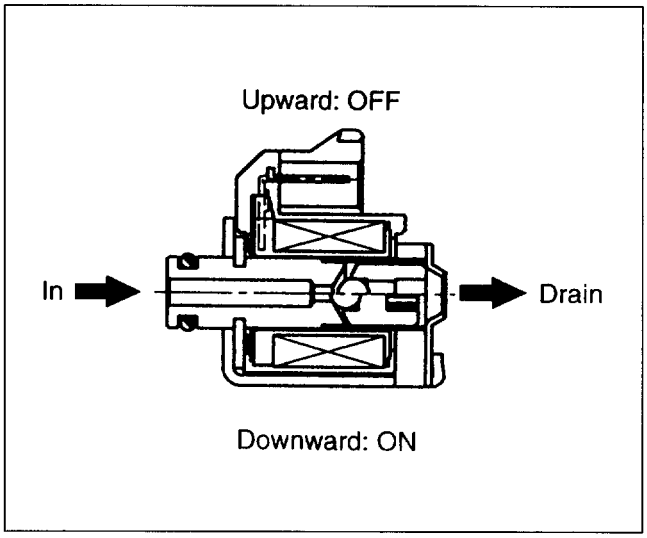

Figure 22. Lock-up Solenoid

Line Pressure Solenoid

(Figure 23)

- This solenoid is fitted in the upper part of the valve body and integrally consists of the electromagnetic component and the pressure regulating valve. It controls the line pressure by a signal from the TCM according to the electric current.

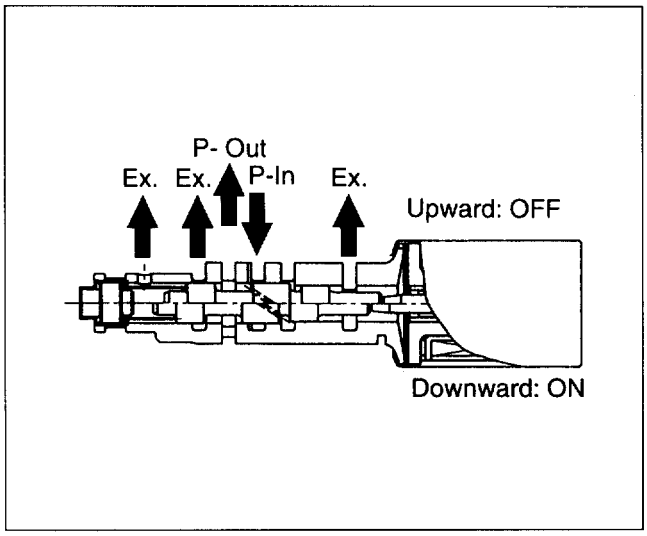

Figure 23. Line Pressure Solenoid

AUTOMATIC TRANSMISSION FLUID (ATF) THERMOSENSOR

- The sensor is fitted to the valve body in the transmission. It converts a change in temperature into a continuous electrical signal, which is sent to the transmission control module (TCM) (figure 24 and 25).

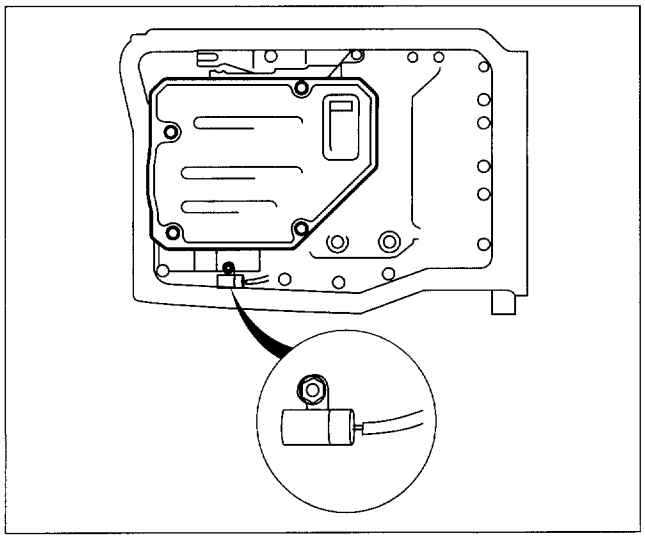

Figure 24. ATF Thermosensor

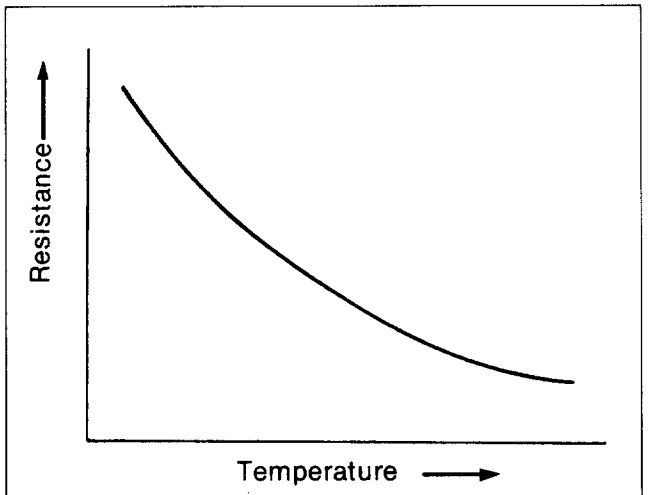

Temperature °C (°F)	Resistance Ω	Temperature °C (°F)	Resistance Ω
–30 (–22)	29613	70 (158)	433
–20 (–4.4)	16704	80 (176)	324
–10 (14)	9842	90 (194)	246
0 (32)	6028	100 (212)	190
10 (50)	3822	110 (230)	148
20 (68)	2500	120 (248)	117
30 (86)	1681	130 (266)	94
40 (104)	1160	140 (284)	76
50 (122)	819	150 (302)	62
60 (140)	590		

Figure 25. Output Characteristic of ATF Thermosensor

AUTOMATIC TRANSMISSION FLUID (ATF) TEMPERATURE SWITCH

- This switches fitted to the right side of the transmission case. It detects abnormal high temperature of the ATF to protect transmission (figure 26).

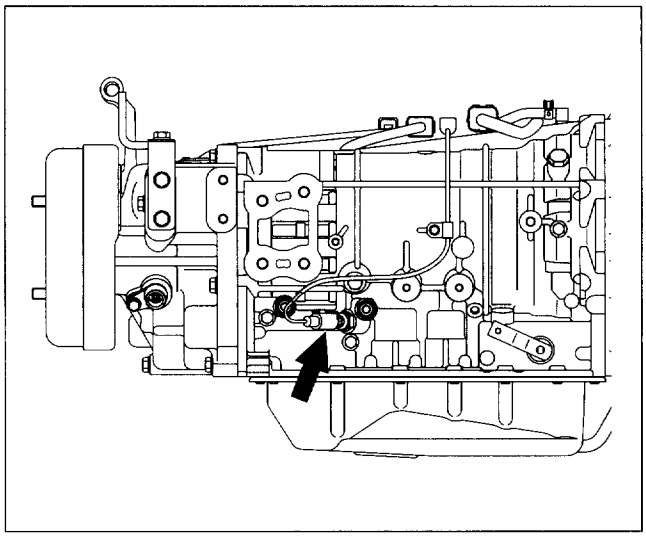

Figure 26. ATF Temperature Switch

INHIBITOR SWITCH (NEUTRAL/ START SWITCH)

(Figure 27)

- Inhibitor switch is attached to the right side of the transmission, and detects P, R, N, D, 2 and 1 range of selector lever.
- Inhibitor switch is set to be "ON" when selector lever is shifted to P, R, N, D, 2 and 1 range.
- Also, inhibitor switch is connected to starter switch circuit and makes engine-starting possible when selector lever is only P or N range.

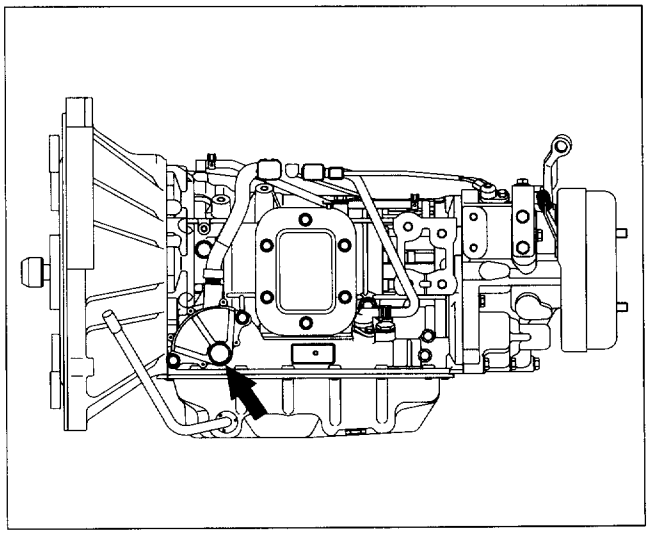

Figure 27. Inhibitor Switch

KICK-DOWN SWITCH

(Figure 28)

- The kick-down switch is fitted to the accelerator pedal. When the pedal is fully depressed, it sends an electrical signal to the transmission control module (TCM).

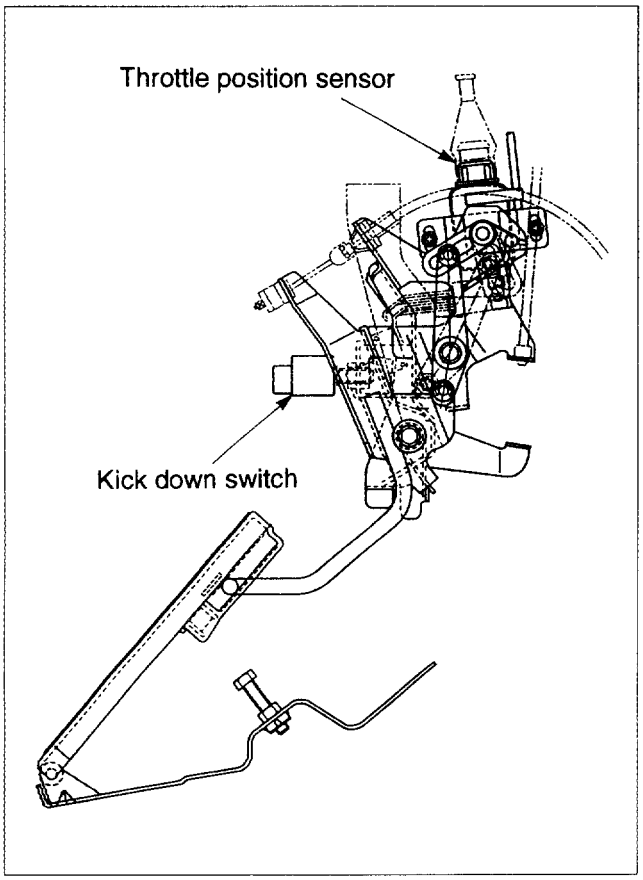

Figure 28. Kick-down Switch and Throttle Position Sensor

THROTTLE POSITION SENSOR

(Figure 28 and 29)

- The throttle position sensor is fitted to the accelerator pedal. It converts the physical throttle opening angle into a continuous electrical signal, to the TCM.
- The TCM detects the throttle opening angle and the speed at which the pedal is depressed by the electrical signal of the throttle position sensor having output characteristics as shown (figure 29).

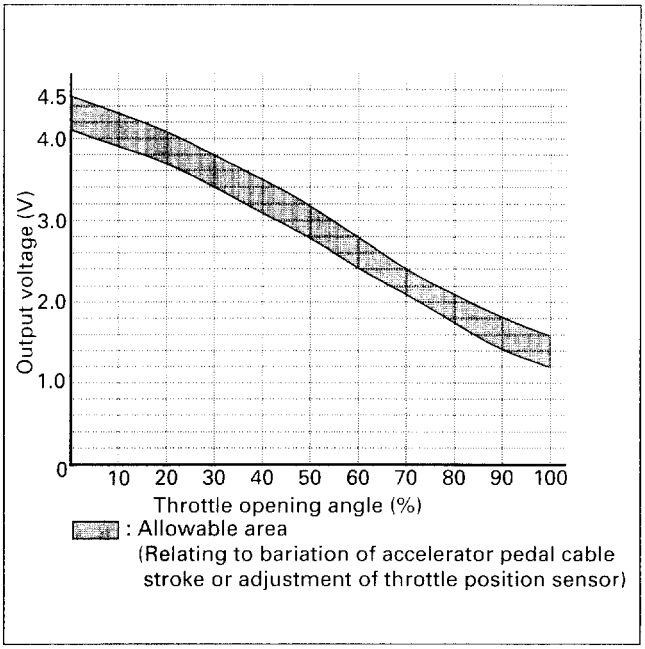

Figure 29. Output Characteristic of Throttle Position Sensor

VEHICLE SPEED SENSOR 2

(Fitted to the speedometer driven gear)

- The vehicle speed sensor 2 is fitted on the speedometer driven gear assembly.
- The number of pulses generated is four pulses (AC) per one rotation of the pinion shaft (figure 32).

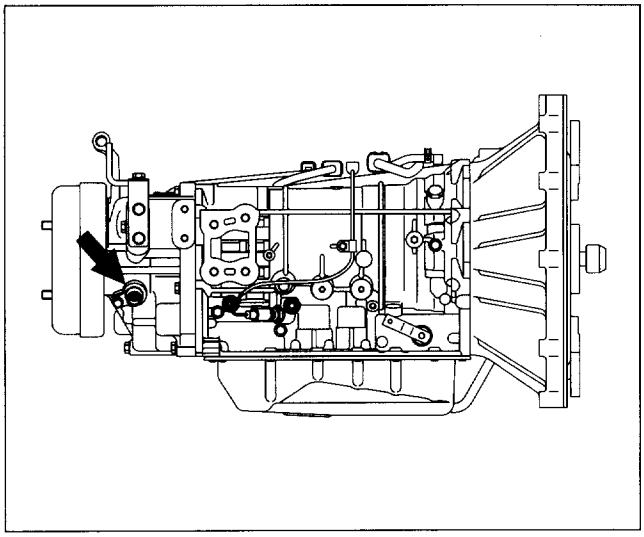

Figure 30. Vehicle Speed Sensor 2 Location

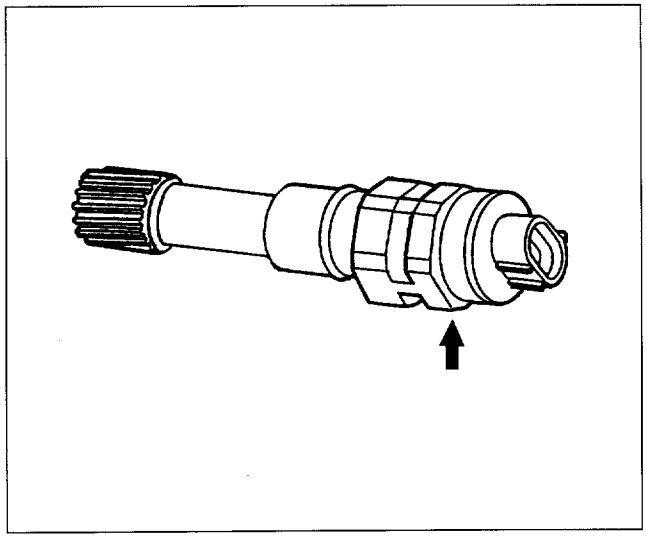

Figure 31. Vehicle Speed Sensor 2

VEHICLE SPEED SENSOR 1

(Fitted to the extension housing)

- This sensor detects the speed of revolution of the parking gear fitted to the output shaft, and generates a pulse (AC=Alternating Current) signal accordingly (figure 31).
- The pulse signal is sent to the transmission control module (TCM) where it is converted into the vehicle speed.
- Should the vehicle speed sensor 2 malfunction for any reason, the vehicle speed sensor 1 takes over control.

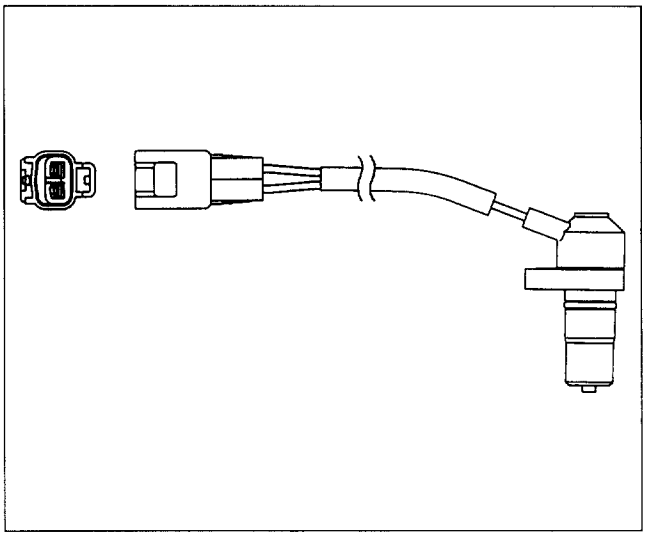

Figure 32. Vehicle Speed Sensor 1

ENGINE SPEED SENSOR

(Figure 33)

- The engine speed sensor fitted on the timing gear case.
- It detects the speed of revolution of the injection pump drive gear and generates a pulse (AC) signal accordingly.
- The pulse signal is sent to the TCM where it is converted into the engine revolution.

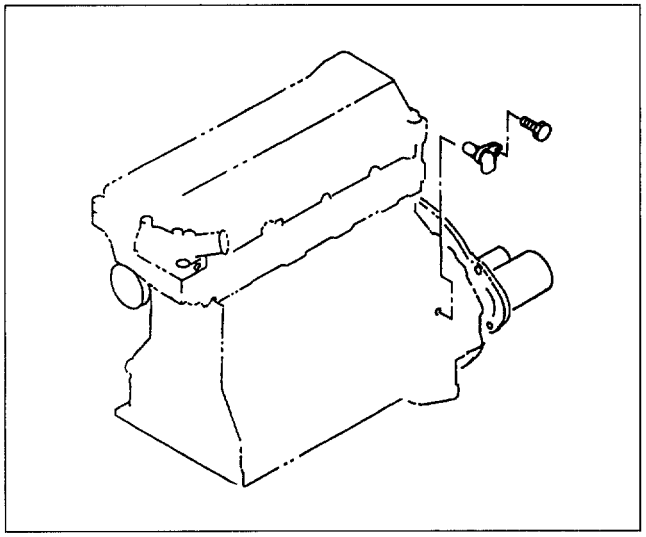

Figure 33. Engine Speed Sensor

TRANSMISSION CONTROL MODULE (TCM)

- The TCM is fitted under the meter cluster. It receives signals from various sensors and judges the running condition of the vehicle accordingly. It compares the result with programmed gear shifting parameters, lock-up operating parameters, etc., and sends signals to solenoids and controls them accordingly.
- It controls seven different items:

1. Line pressure
2. Gear shifting (including overdrive control)
3. Lock-up
4. Exhaust brake
5. "2-3" timing
6. Self-diagnosis
7. Fail-safe function

CONTROL MECHANISM

CONTENT OF FUNCTION AND CONTROL

Item	Description
Line pressure control	• The line pressure solenoid is controlled by the TCM, based on signals from inhibitor switch and those regarding vehicle speed, throttle opening angle, etc., to automatically control the pressure regulator. This keeps oil pump delivery pressure at an optimal line pressure for driving condition. • Line pressure parameters including line pressure for continuous driving and that for gear shifting are stored in the TCM's microcomputer and appropriate parameters are selected from time to time.
Gear shift control	• No. 1 and No. 2 shift solenoids are controlled by the TCM, based on signals from inhibitor switch and those regarding vehicle speed, throttle opening angle, etc., to automatically shift gears to an optimal pattern.
O/D up-shift inhibition control	• When O/D OFF switch is turned off or when the transmission fluid temperature is low, upshifting to D_4 speed (O/D) is prohibited.
Lock-up control	• When driving in D_4, D_3 and D_2 gear, TCM activates the lock-up solenoid based on vehicle speed, throttle opening angle and other signals to automatically control lock-up operation. • When transmission fluid temperature is low, the TCM prohibits lock-up operation.
Engine brake control	• The TCM activates the solenoid based on signals from inhibitor switch, and throttle position sensor to automatically control clutch operation. When exhaust brake is used, it increases line pressure to ensure sufficient clutch capacity.
Fail-safe function	• In case of malfunction of the vehicle speed sensor, throttle position sensor, all solenoids or inhibitor switch, TCM automatically begins fail-safe control to minimize effects on driving.
Self-diagnosis function	• In case of malfunction (with key switch turned on) in vehicle speed sensor, throttle position sensor, all solenoids, ATF thermosensor or engine RPM signal, check trans light at meter panel starts blinking to warn the driver. Malfunctioning system diagnostic trouble data is stored in the TCM and, when self-diagnosis start signal is received, the TCM causes the check trans light to blink in a special manner to indicate the diagnostic result.
Throttle learning control	• The varied throttle position sensor voltage is corrected within the TCM to ensure constant gear-shift control.
Serial data control	• TCM data (such as the vehicle and engine speed) is checked and actuator test controlled by sending signals from "Scan Tool" to the communication program incorporated in the TCM.
Exhaust brake control	• When vehicle speed is lower than regulated speed, while shifting or while lock-up operation, TCM cuts exhaust brake operation.

ATF: Automatic Transmission Fluid O/D: Overdrive TCM: Transmission Control Module

CONTROL ITEM, INPUT AND OUTPUT

Item \ Control Item			Shift control (Main)	Shift control (Exception)	Timing solenoid control	Lock-up	Line pressure control	Throttle learning control	Fail-safe	Self-diag.	Exhaust brake control
Input	Vehicle speed sensor 2	Fitted to Speedometer Driven gear	○	○	○	○	○	○	○	○	○
Input	Vehicle speed sensor 1 (*1)	Fitted to transmission	○	○	○	○	○	○	●	○	○
Input	Engine speed sensor				○	○		○	○	○	
Input	Idle signal (*2)							○		○	
Input	Kick-down switch (*2)							○		○	
Input	Throttle position sensor		○	○	○	○	○	○	●	○	
Input	ATF thermo switch		○			○					
Input	ATF thermosensor						○			○	
Input	Exhaust brake operation signal						○		○	○	○
Input	FICD						○	○			
Input	O/D OFF switch		○		○	○					
Input	Brake switch		○			○		○			
Input	Inhibitor switch		○	○	○	○	○	○	●	○	○
Output	No.1 shift solenoid		○	○					●	○	
Output	No.2 shift solenoid		○	○					●	○	
Output	Timing solenoid		○		○				●	○	
Output	Lock-up solenoid					○			○	○	
Output	Exhaust brake cancel signal								○	○	○
Output	Line pressure solenoid						○		●	○	
Output	Check trans indicator									○	

*1: Back-up for vehicle speed sensor 2
*2: Back-up for throttle position sensor
ATF : Automatic Transmission Fluid
O/D : Overdrive
● : Causes "Check Trans" light to flash.

FICD : First Idle Control Device

MAJOR INPUT/OUTPUT COMPONENT FUNCTION

Component			Function
Input	Vehicle speed sensor 1 (Fitted to transmission)		Detects output shaft revolution and sends RPM signal to TCM.
	Vehicle speed sensor 2 (Fitted to speedometer driven gear)		In case of malfunction of vehicle speed sensor 1 fitted to the transmission, a signal from this sensor (spare sensor) is used for continued control.
	Engine speed sensor		Detects engine revolution and sends signal to TCM.
	Idle signal (from ECM)		Detects when accelerator pedal is fully released and sends signal to TCM.
	Kick-down switch		This switch detects when the accelerator pedal is fully depressed and sends signal to TCM.
	Throttle position sensor		Fitted to accelerator pedal; detects throttle opening angle and pedal operating speed and sends signal to TCM.
	ATF thermo switch		Detects abnormal high temperature of ATF and sends signal to TCM.
	ATF thermosensor		Detects ATF temperature and sends signal to TCM.
	Exhaust brake operation signal		Detects whether exhaust brake is in use and sends signal to TCM.
	FICD operation signal		Detects whether FICD is in use and sends signal to TCM.
	O/D OFF switch		Detects O/D OFF switch ON or OFF position and sends signal to TCM.
	Brake switch		Detects when brake pedal is depressed and sends signal to TCM.
	Inhibitor switch		Detects select lever position and sends to TCM.
Computer	TCM		Judges necessary line pressure, gear shifting point, lock-up operation and engine brake based on electrical signals from switches and sensors and sends appropriate signals to solenoids.
Output	Solenoid	No.1 and No.2 shift solenoids	Selects appropriate gear shifting position for current driving condition based on signal from TCM.
		Timing solenoid	Controls the timing during 2nd and 3rd shifting based on signal from TCM.
		Lock-up solenoid	Regulates (decreases) lock-up pressure to appropriate level for current driving condition based on signal from TCM.
		Line pressure solenoid	Regulates (decreases) oil pump delivery pressure to the appropriate line pressure for current driving condition based on signal from TCM.
	Exhaust brake cancel signal		Cancel exhaust brake.
	Check trans light		Indicates transmission malfunction.
Input/output	Scan Tool		Self-diagnosis (such as check of vehicle input/output values and actuator test) is performed by connecting TCM and “Scan Tool”.

CONTROL CIRCUIT BLOCK DIAGRAM

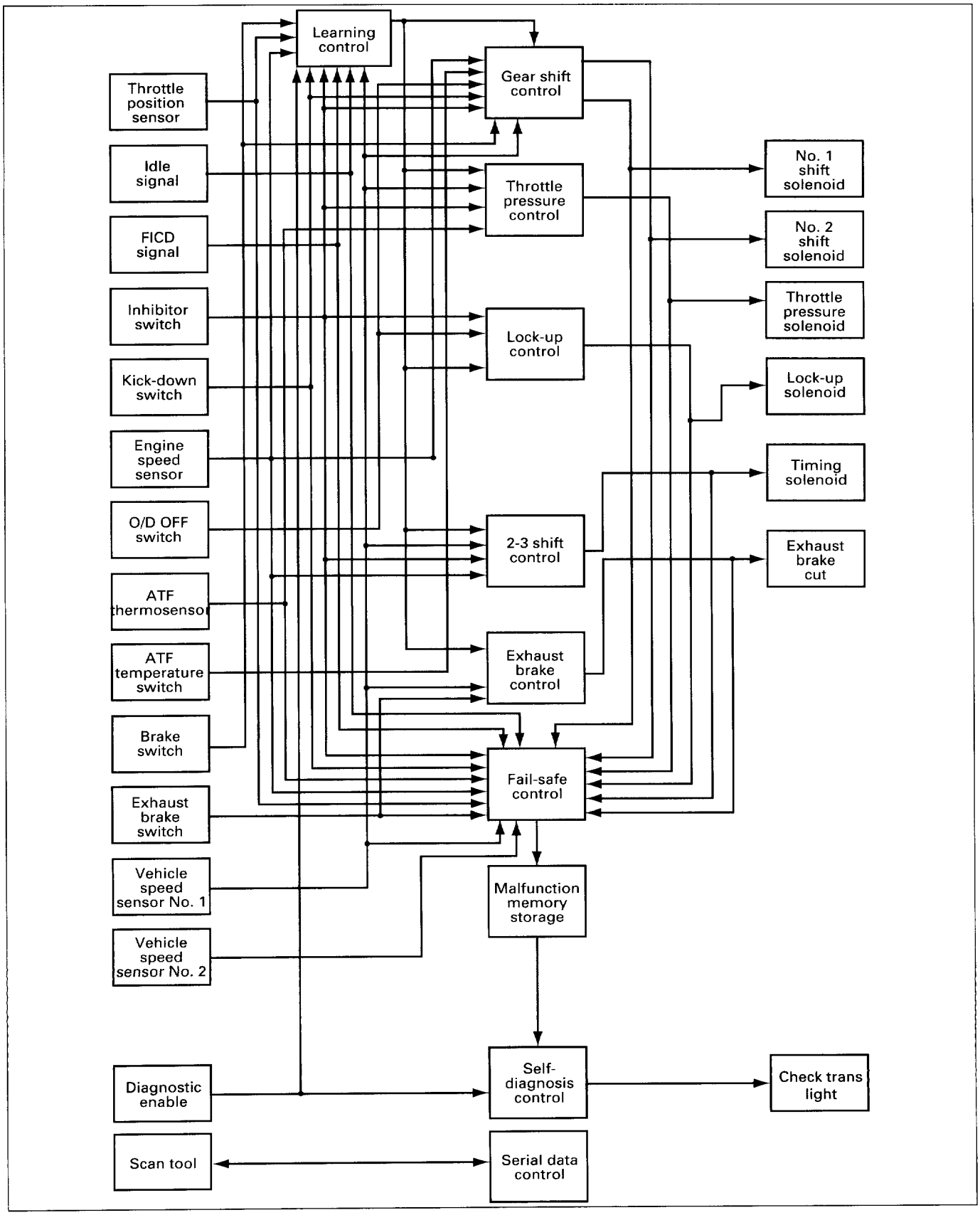

Figure 34. Control Circuit Block Diagram

CIRCUIT DIAGRAM(LHD model)

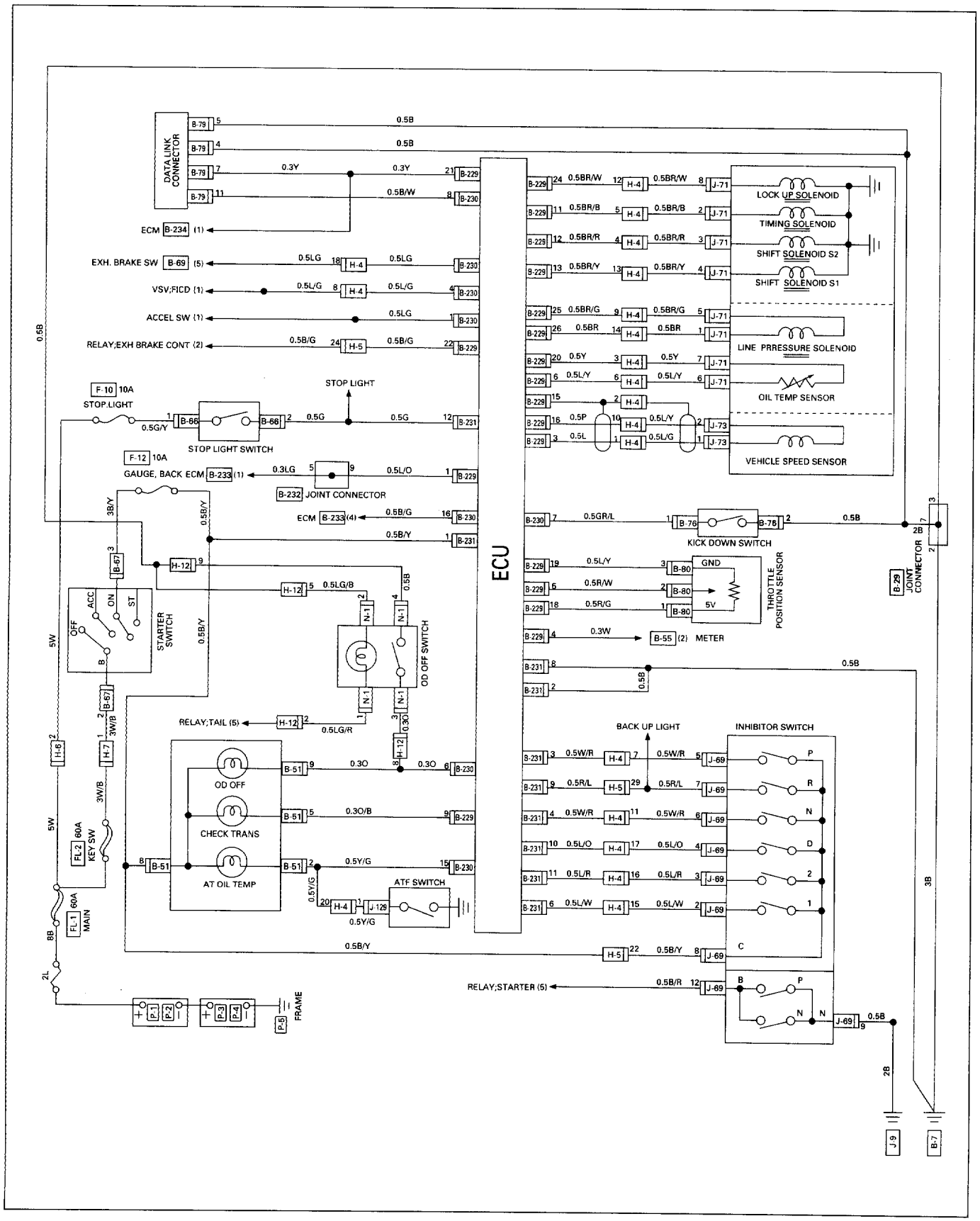

Figure 35-A. Circuit Diagram

CIRCUIT DIAGRAM(RHD model)

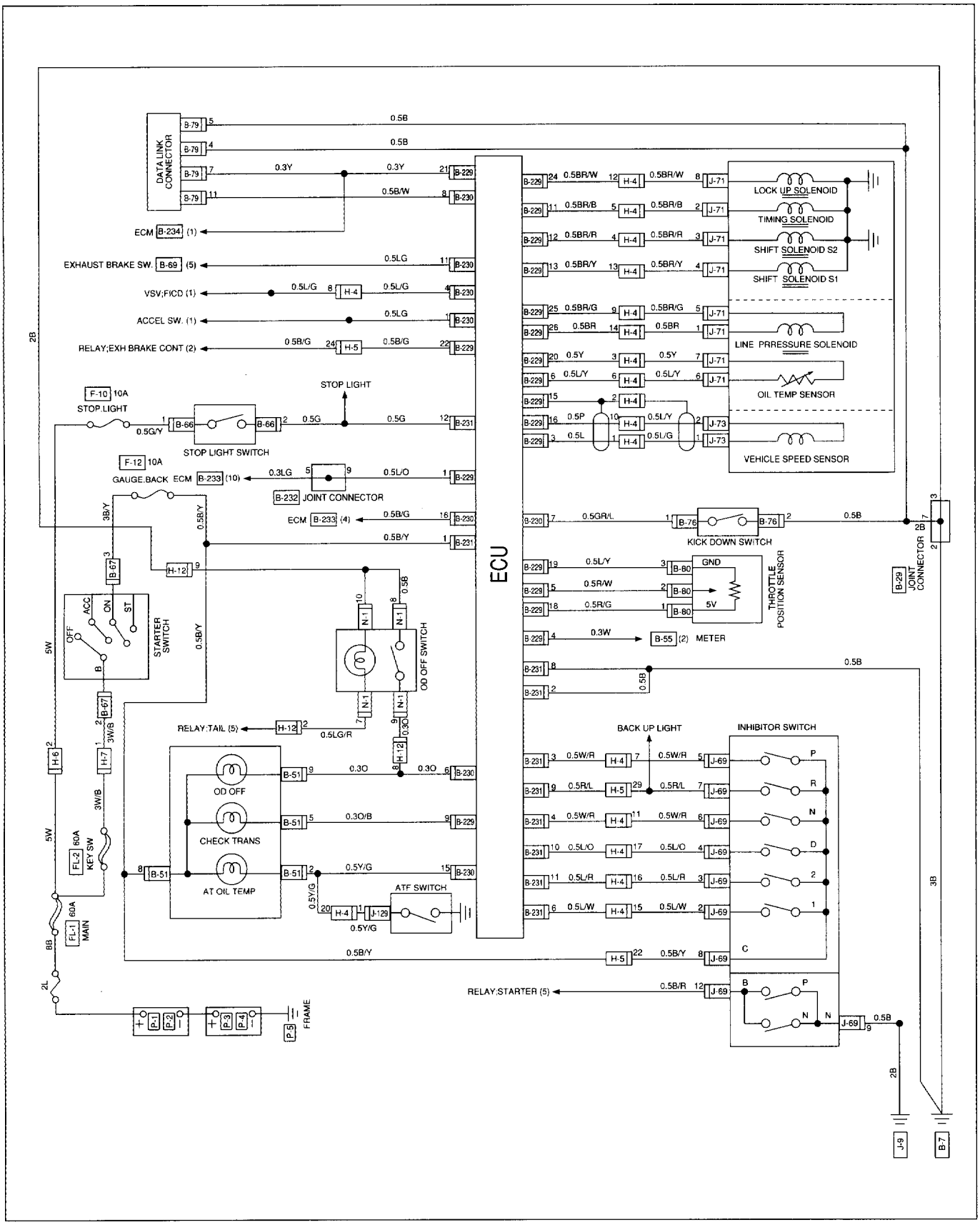

Figure 35-B. Circuit Diagram

VALVE OPERATION

VALVE FUNCTION

Upper Valve Body
(figure 36)

	Valve name	Function
(1)	• 2-3 shift valve	• Shifts between the 2nd and the 3rd gears.
(2)	• Reverse inhibitor valve	• When the gear is shifted to the R range when the vehicle is running forward at high speed, this valve provides the necessary solenoid output to prevent shifting to the reverse gear.
(3)	• Modulator valve	• Regulates the line pressure before it is supplied to the lock-up signal valve, orifice control valve, etc.
(4)	• Throttle valve	• Regulates the signal pressure (throttle pressure) to regulate the line pressure to the optimum level for the driving conditions.
(5)	• Secondary regulator valve	• Controls the oil pressure being sent from the primary regulator valve to the torque converter, and controls the pressure of the lubricant being supplied to all parts.
(6)	• Reducing valve	• Reduces the line pressure before it is supplied to the throttle valve.
(7)	• Lock-up signal valve	• Activates or deactivates the lock-up function.
(8)	• Accumulator control valve	• Lowers the back pressure of the accumulator to the low throttle opening angle, and acquires from line pressure the necessary accumulator control pressure for easing the gear shifting shock.
(9)	• Low coast modulator valve	• Regulates pressure from the line pressure to a low pressure to ease the gear shifting shock when shifting to the L range.
(10)	• Orifice control valve	• Switches the orifices to reduce the shock.
(11)	• Low inhibitor valve	• When the gear is shifted to the L range when driving at high speed, this valve shifts to the 3rd gear at the timing solenoid output.
(12)	• Check valve	• Switches the oil passage to the rear clutch (C2) between the D range and the R range.

Lower Valve Body

(Figure 36)

	Valve name	Function
(1)	• Manual valve	• Switches the oil passage to the P, R, N, D, 2, or L range according to the select lever action.
(2)	• 1-2 shift valve	• Switches between the 1st and the 2nd gears.
(3)	• 3-4 shift valve	• Switches between the 3rd and the O/D gears.
(4)	• Pressure relief valve	• Regulates the supply pressure to the cooler to the low pressure.
(5)	• Primary regulator valve	• Controls the oil pressure (line pressure) reaching respective elements.
(6)	• Lock-up control valve	• Switches the flow of fluid being sent to the torque converter.
(7)	• C0 exhaust valve	• Eases the gear shifting shock when shifting from the 3rd to 2nd gears.
(8)	• 2-3 timing valve	• Optimizes the oil pressure switching timing to ease the shock when shifting from 2nd to the 3rd gears.
(9)	• Cut-back valve	• Causes the cut-back pressure to act upon the throttle valve to lower the line pressure.

VALVE BODY CONSTRUCTION

Upper Valve Body:
1. 2-3 Shift Valve
2. Reverse Inhibitor Valve
3. Modulator Valve
4. Throttle Valve
5. Secondary Regulator Valve
6. Reducing Valve
7. Lock-up Signal Valve
8. Accumulator Control Valve
9. Low Coast Modulator Valve
10. Orifice Control Valve
11. Low Inhibitor Valve
12. Check Valve

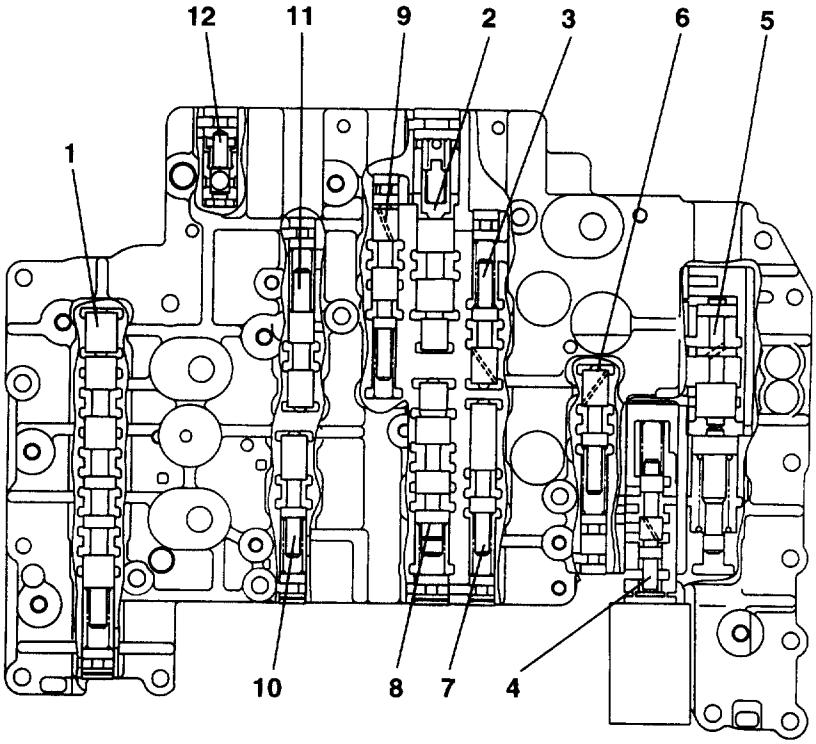

Lower Valve Body:
1. Manual Valve
2. 1-2 Shift Valve
3. 3-4 Shift Valve
4. Pressure Relief Valve
5. Primary Regulator Valve
6. Lock-up Control Valve
7. C0 Exhaust Valve
8. 2-3 Timing Valve
9. Cut-back Valve

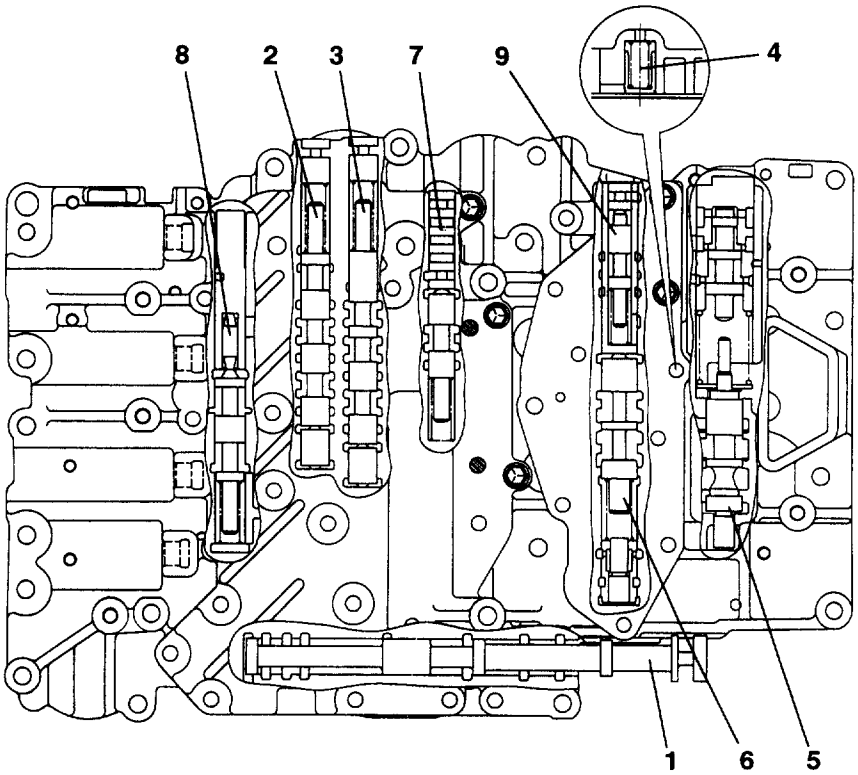

Figure 36. Valve Body Construction

GEAR TRAIN (TRANSMISSION MECHANISM) OPERATION

CONSTRUCTION AND OPERATION

The gear train consists of three pairs of planetary gears, three pairs of multi-plate clutches, three pairs of multi-plate brakes and two pairs of one-way clutches.

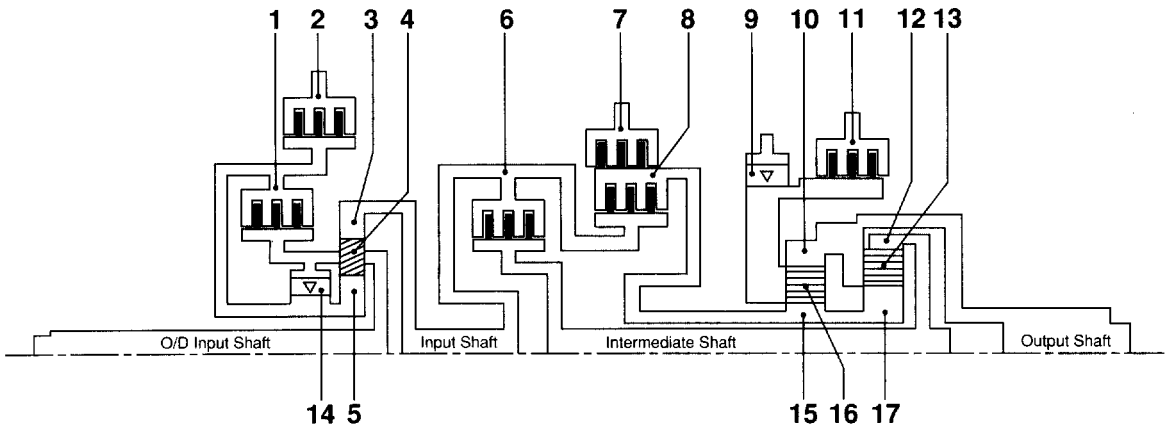

1. O/D Direct Clutch (C0)
2. O/D Brake (B0)
3. O/D Ring Gear
4. O/D Pinion Gear
5. O/D Sun Gear
6. Front Clutch (C1)
7. 2nd Brake (B1)
8. Rear Clutch (C2)
9. No. 2 One-way Clutch (F1)
10. Front Ring Gear
11. 1st and Reverse Brake (B2)
12. Rear Ring Gear
13. Rear Pinion Gear
14. O/D One-way Clutch (F0)
15. Front Sun Gear
16. Front Pinion Gear
17. Rear Sun Gear

Figure 37. Construction of Automatic Transmission

COMPONENT NAME AND FUNCTION

Component name	Symbol	Function
O/D direct clutch	C0	Connects O/D sun gear and O/D carrier.
Front clutch	C1	Transmit the engine torque from the input shaft to the intermediate shaft.
Rear clutch	C2	Transmit the engine torque from the front clutch hub to the front and rear planetary sun gear.
O/D brake	B0	Locks the O/D planetary sun gear.
2nd brake	B1	Locks the front and rear planetary sun gear.
1st & Rev. brake	B2	Locks the front planetary carrier.
O/D one-way clutch	F0	Locks the O/D sun gear and O/D planetary carrier during acceleration in 1st, 2nd or 3rd gear.
One-way clutch No.2	F1	Locks the front planetary carrier during acceleration in 1st gear.
No.1 shift solenoid No.2 shift solenoid	S1 S2	The ON/OFF combinations of the two solenoids are used to control the gear position.

COMPONENT AND THEIR OPERATING CONDITION

Shift position		C0	C1	C2	B0	B1	B2	F0	F1	S1	S2	Remarks
P					○					○		
R		○		○			○	●				
N					○					○		
D	1st	○	○					●	●	○		Automatic shift control 1 ⇔ 2 ⇔ 3 ⇔ 4
	2nd		○			○		●		○	○	
	3rd	○	○	○				●			○	
	O/D		○	○	○							
2	1st	○	○					●	●	○		Automatic shift control 1 ⇔ 2 ⇐ 3
	2nd	○	○			○		●		○	○	
	3rd	○	○	○				●			○	
L	1st	○	○				○	●	●	○		Fixed at 1st speed 1 ⇐ 2 ⇐ 3 (*)
	2nd	○	○			○		●		○	○	
	3rd	○	○	○				●			○	

○ - Engaged
● - Operative when accelerating
* - 3rd gear engaged when the timing solenoid is active

N AND P RANGES

N range

- The front clutch (C1) and the rear clutch (C2) are released. The torque from the input shaft is not transmitted to the output shaft.

P range

- As in the case of the N range above, the torque from the input shaft is not transmitted to the output shaft. The parking lock pawl, which is linked to the select lever, is engaged with the parking lock gear, which is directly coupled with the output shaft. The vehicle is locked as the result.

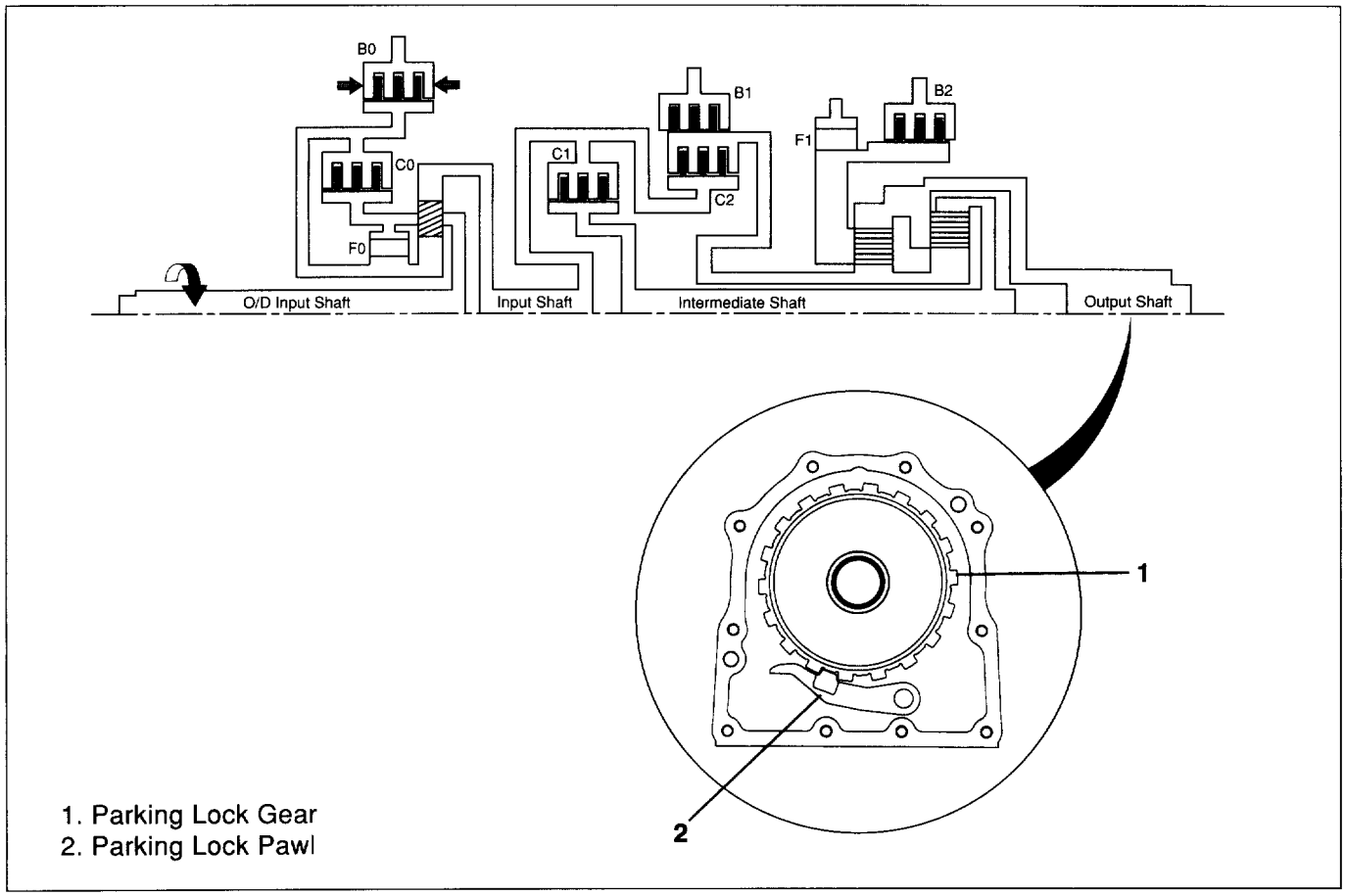

Figure 38. N and P Range

FIRST GEAR IN D OR 2 RANGE

The O/D direct clutch (C0), front clutch (C1), O/D one-way clutch (F0) and No.2 one-way clutch (F1) are activated to form the 1st gear. In the O/D planetary gear, the O/D direct clutch (C0) connects the O/D planetary carrier (O/D input shaft) to the O/D sun gear. This prevents the O/D pinion gear from turning so that the O/D planetary carrier transmits the driving force to the input shaft along with the O/D ring gear as a unit (direct coupling). When the O/D planetary carrier turns clockwise the O/D pinion gear tends to turn counterclockwise causing the O/D sun gear to turn clockwise. However, since it turns faster than the O/D planetary carrier, the O/D one-way clutch (F0) locks the O/D planetary carrier with the O/D sun gear. This prevents the O/D pinion gear from turning, as in the case when the O/D direct clutch (C0) is activated, so that the O/D planetary carrier transmit the driving force to the input shaft along with the O/D ring gear as a unit (direct coupling). The two-way transmission of the power helps to ease the load being applied to the O/D direct clutch (C0).

The clockwise rotational force of the input shaft is transmitted, by the front clutch (C1), from the intermediate shaft to the rear planetary ring gear and to the rear planetary pinion gear. Since the rear planetary carrier is stopped at this time due to the vehicle load, the rear sun gear receives the counterclockwise rotational force and transmits it to the front planetary pinion gear. This causes the front planetary carrier to turn counterclockwise. However, since the front planetary carrier is prevented from turning counterclockwise by the one-way clutch No.2 (F1), the pinion gear causes the front ring gear and the rear planetary carrier to turn clockwise so that the driving force is transmitted to the output shaft.
(Rotational direction is viewed from torque converter side)

Path of power transmission

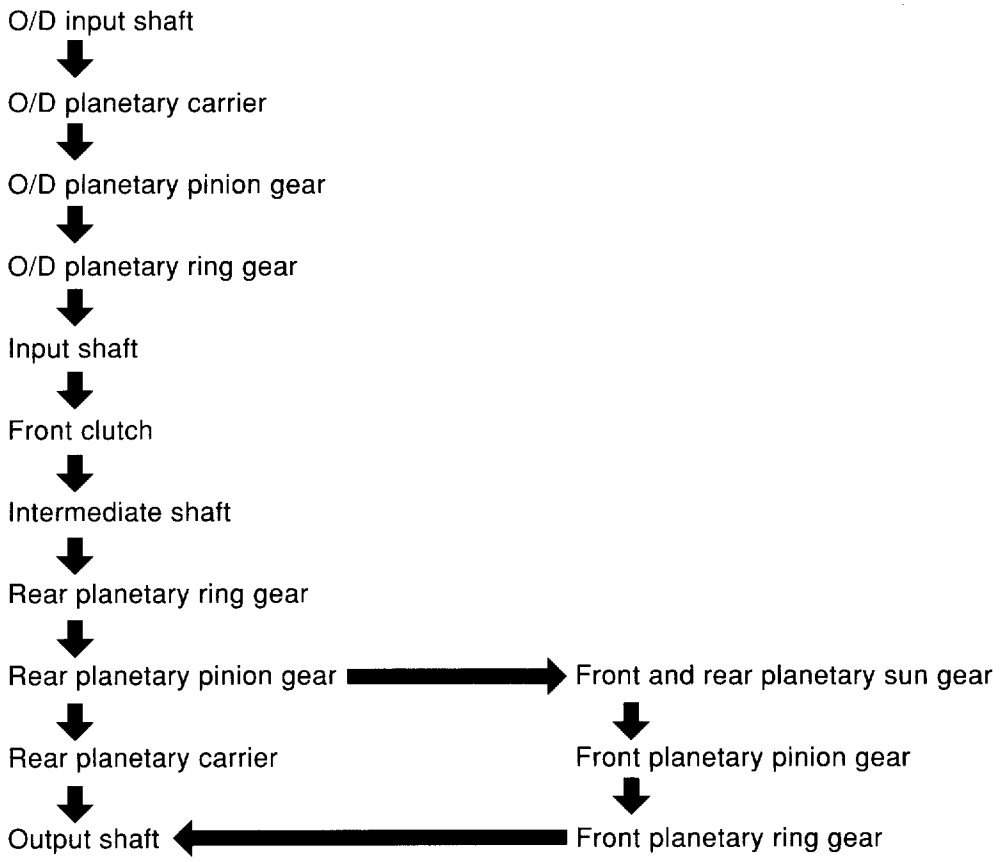

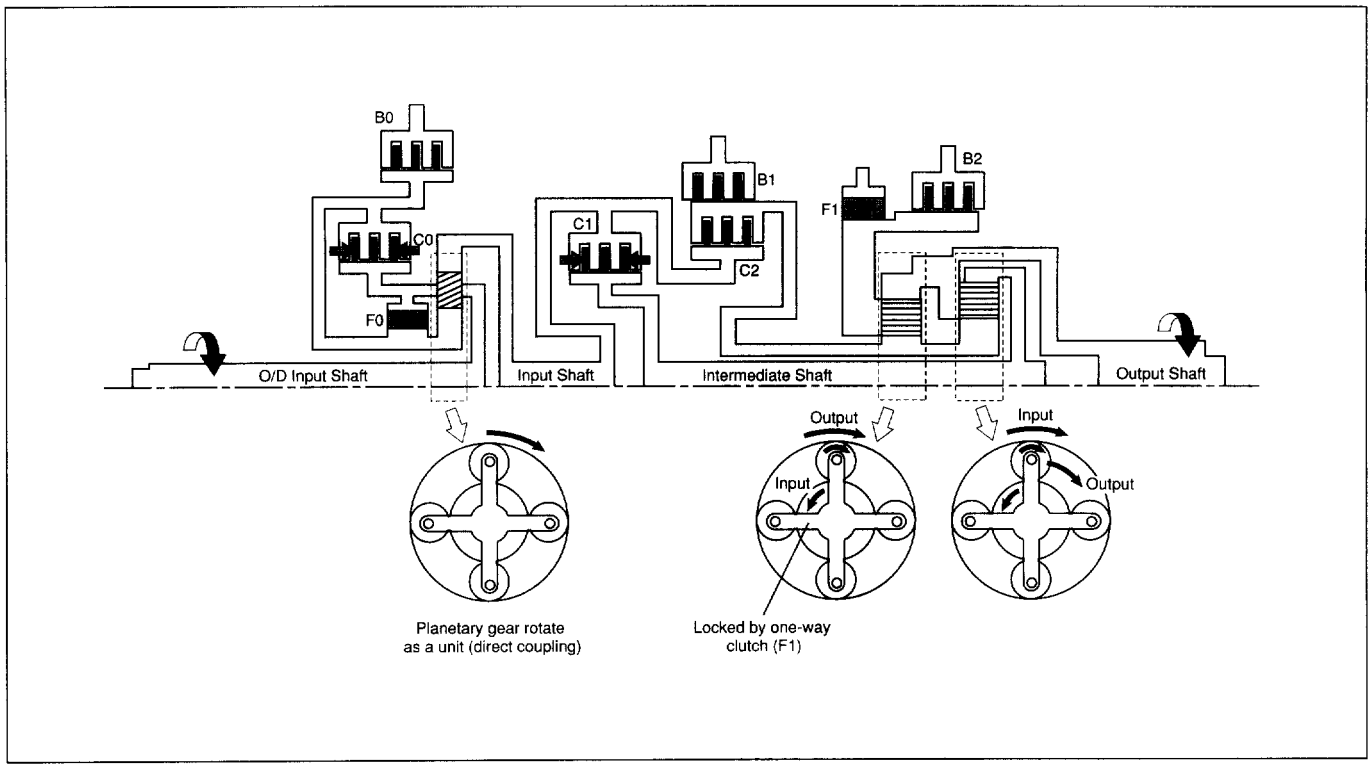

Figure 39. First Gear In D or 2 Range

SECOND GEAR IN D RANGE

The front clutch (C1), 2nd brake (B1), and O/D one-way clutch (F0) are activated to form the 2nd gear. In the 2nd gear, the rotational force of the input shaft caused by the O/D one-way clutch (F0) is transmitted from the intermediate shaft to the rear planetary ring gear and to the rear planetary pinion gear. At this time, the rear sun gear which is engaged with the pinion gear receives a counterclockwise rotational force. However, since it is prevented from turning by the 2nd brake (B1), the rotational force is not transmitted to the front planetary gear. It is transmitted via the rear pinion gear to the rear planetary carrier and to the output shaft.

Path of power transmission	
O/D input shaft	Intermediate shaft
↓	↓
O/D planetary carrier	Rear planetary ring gear
↓	↓
O/D planetary pinion gear	Rear planetary pinion gear
↓	↓
O/D planetary ring gear	Rear planetary carrier
↓	↓
Input shaft	Output shaft
↓	
Front clutch	

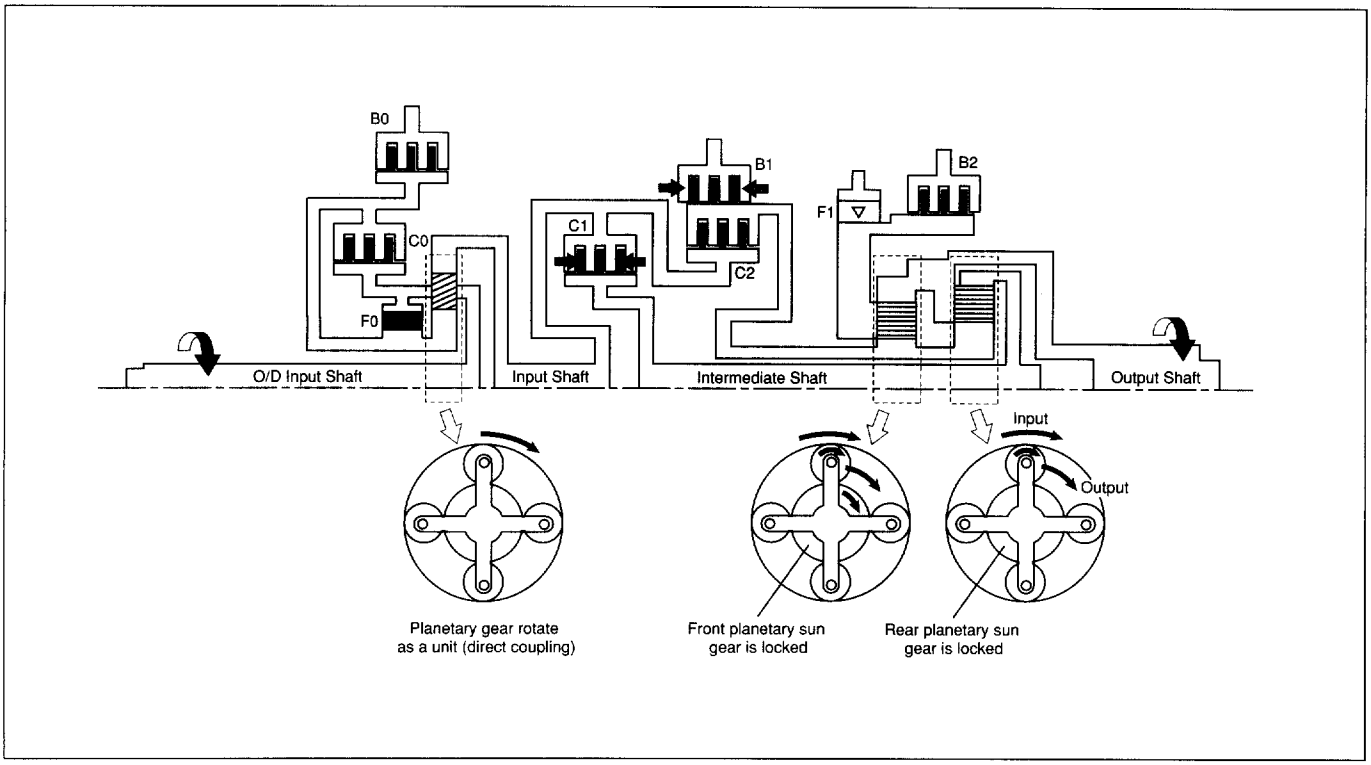

Figure 40. Second Gear in D Range

THIRD GEAR IN D, 2, L RANGE

The O/D direct clutch (C0), front clutch (C1), rear clutch (C2), and O/D one-way clutch (F0) are activated to form the 3rd gear. In the 3rd gear, the intermediate shat and the front and rear sun gears rotate in the same direction as a unit because of the front clutch (C1) and the rear clutch (C2). Therefore, the front and rear planetary pinion gears are locked so that the planetary gear turns as a unit. As the result, the rotational force of the input shaft is transmitted directly to the output shaft without being reduced.

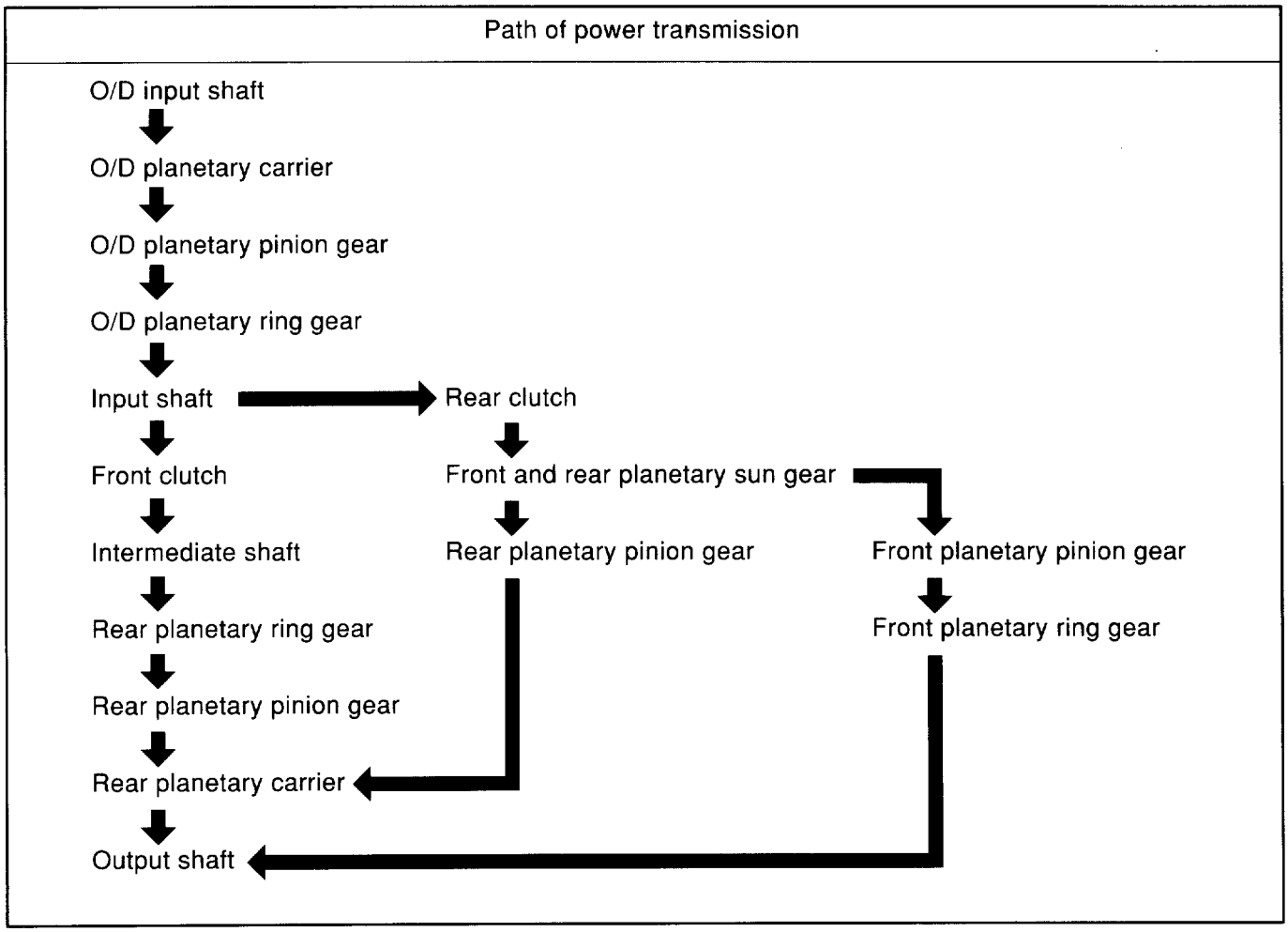

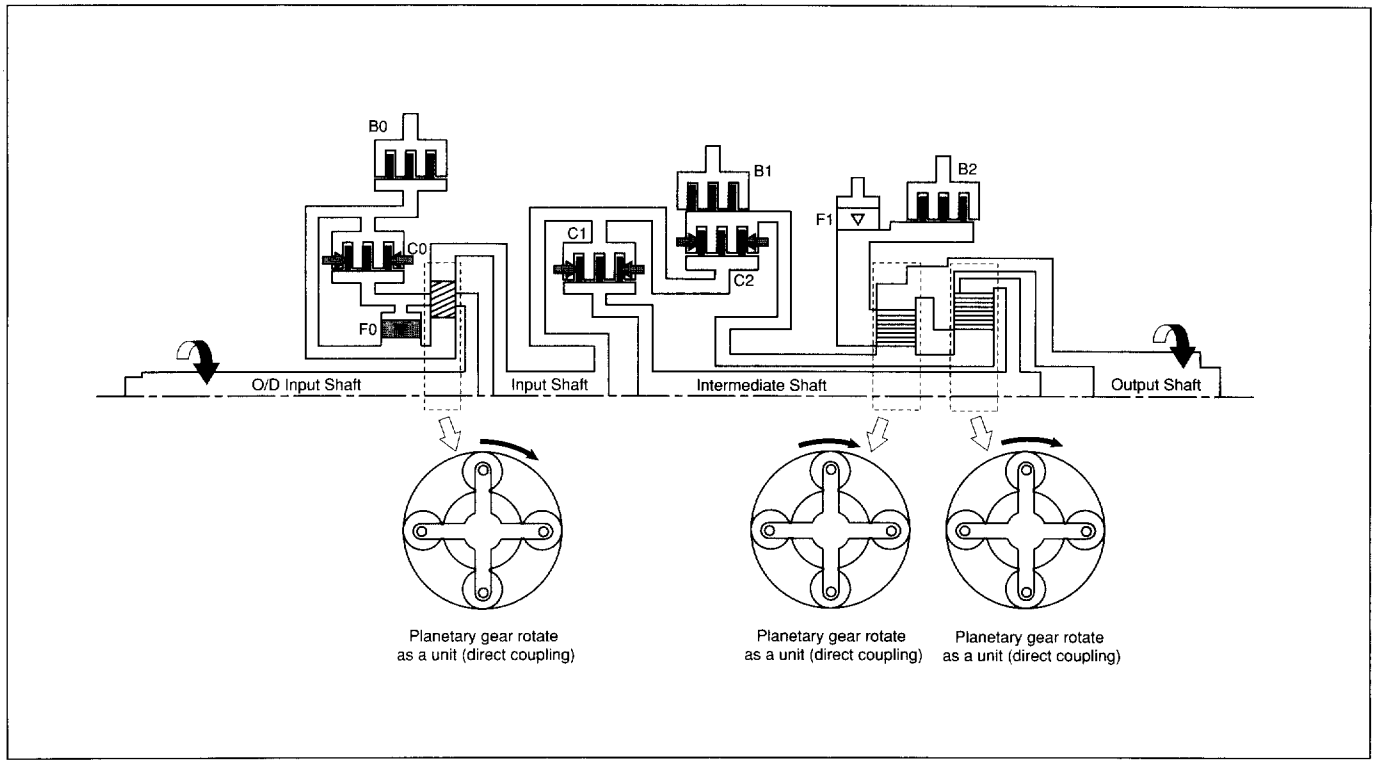

Figure 41. Third Gear in D, 2, L Range

OVERDRIVE GEAR IN D RANGE

When the overdrive conditions (shown in the table below) are met in the 3rd gear condition, the O/D direct clutch (C0) is released. At the same time, the O/D brake (B0) is activated to form the overdrive gear. In the overdrive gear, the O/D sun gear is locked by the O/D brake (B0). Therefore, the rotational force which is transmitted from the O/D input shaft to the O/D planetary carrier causes the O/D planetary pinion gear to turn about itself and revolve at the same time. This increases the speed of the O/D planetary ring gear (input shaft) and, as in the case of the 3rd gear, the rotational force of the input shaft is transmitted directly to the output shaft.

Path of power transmission

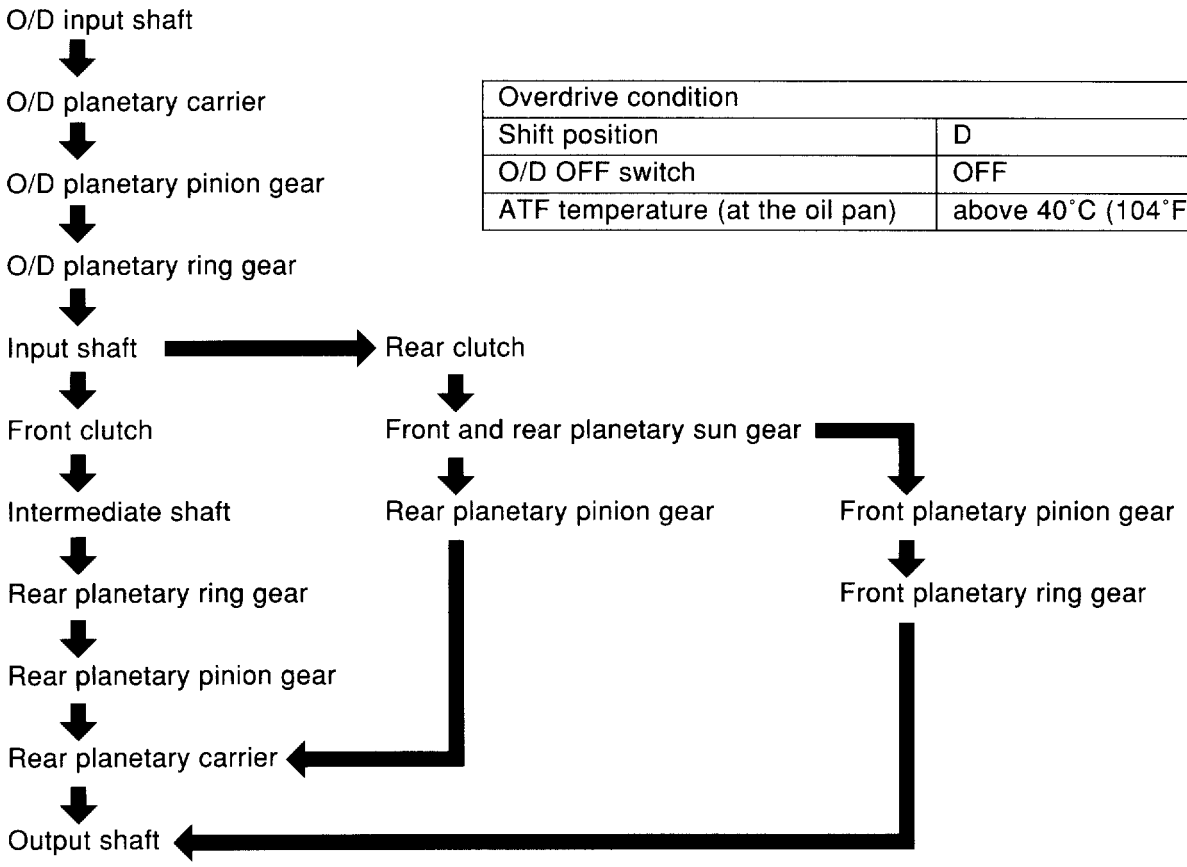

Overdrive condition	
Shift position	D
O/D OFF switch	OFF
ATF temperature (at the oil pan)	above 40°C (104°F)

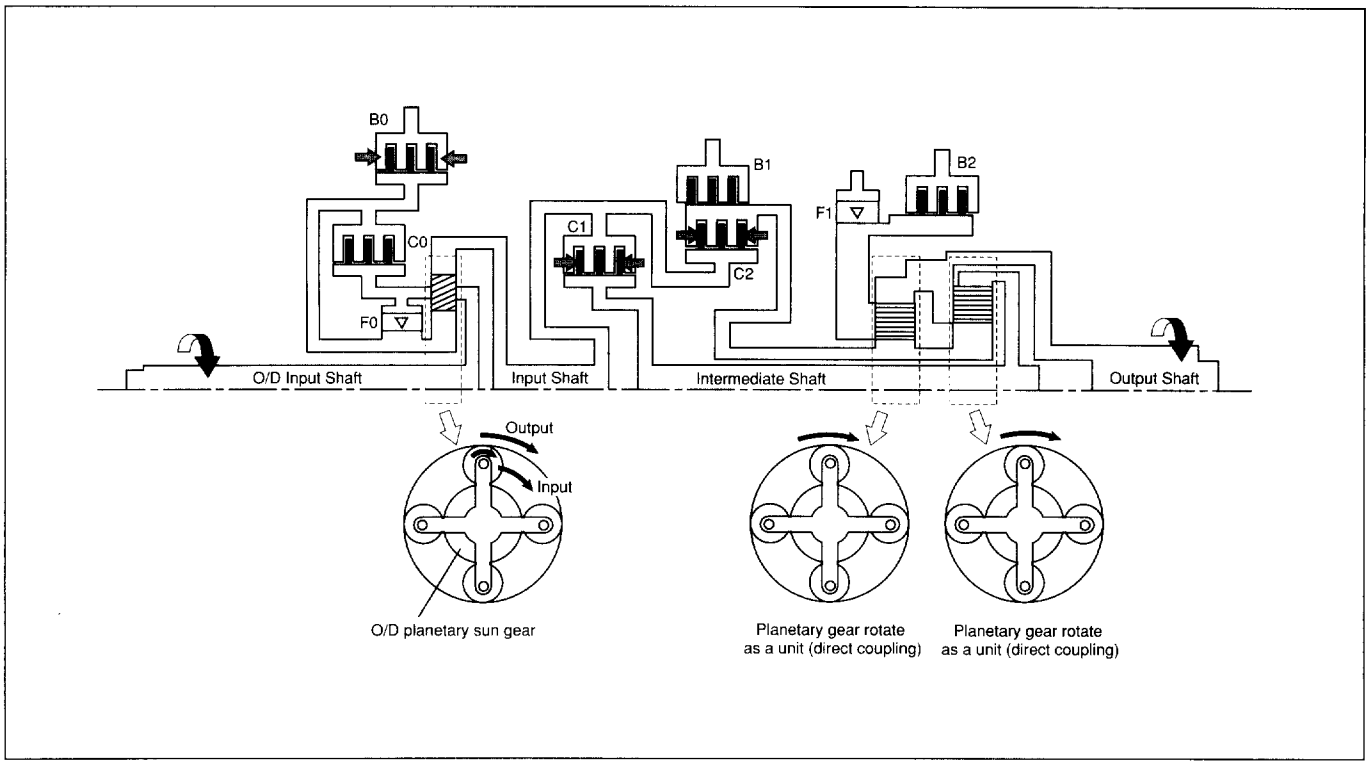

Figure 42. Overdrive Gear in D Range

SECOND GEAR IN 2 RANGE

The rotational force is transmitted in the same way as in the case of the 2nd gear in the D range with a few exceptions. The clockwise rotation of the O/D sun gear during the engine brake is prevented by the O/D direct clutch (C0). In other words, the rotational force is transmitted to the input shaft by the O/D one-way clutch (F0) when the vehicle is driven by the second gear in the D range. When the engine brake is applied, the counterclockwise rotational force of the O/D sun gear deactivates the O/D one-way clutch. The engine brake takes no effect as the O/D sun gear idles in this condition. For this reason, the O/D direct clutch (C0) is activated in the 2nd range to engage the O/D sun gear and the O/D planetary carrier so that the engine brake is effective.

Path of power transmission	
O/D input shaft	
↓	
O/D planetary carrier	Intermediate shaft
↓	↓
O/D planetary pinion gear	Rear planetary ring gear
↓	↓
O/D planetary ring gear	Rear planetary pinion gear
↓	↓
Input shaft	Rear planetary carrier
↓	↓
Front clutch	Output shaft

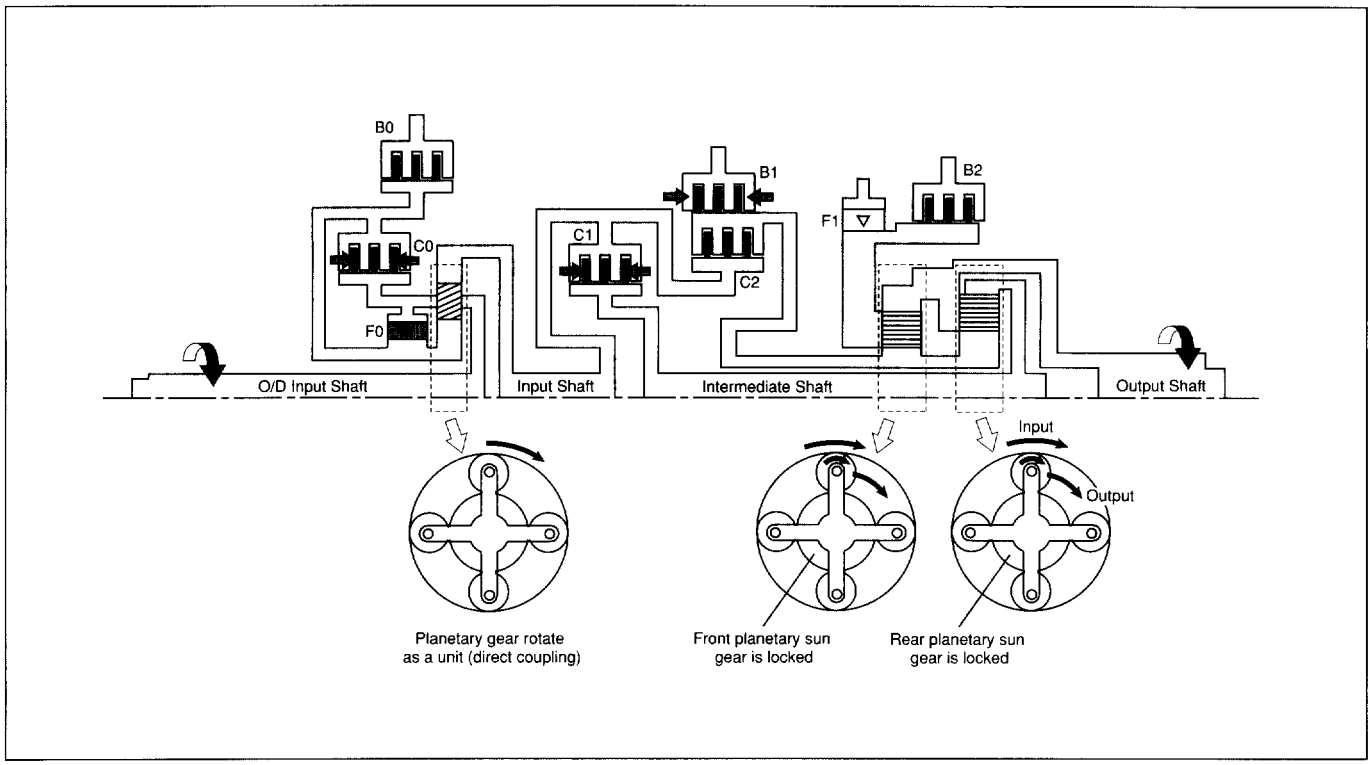

Figure 43. Second Gear in 2 Range

FIRST GEAR IN L RANGE

The rotational force is transmitted in the same way as in the case of the 1st gear in the D and 2nd ranges with a few exceptions. When the engine brake is applied, the clockwise rotation of the front planetary carrier is prevented by the 1st and reverse brake (B2). When the vehicle is driven by the 1st gear in the D or 2nd range, the counterclockwise rotation of the front planetary carrier is locked by the one-way clutch No.2 (F1) so that the rotational force is transmitted to the output shaft. When the engine brake is applied, however, a counter force deactivates the one-way clutch No.2 (F1). This causes the front planetary carrier to idle and the engine brake takes no effect. In the L range, the 1st and reverse brake (B2) is activated to lock the front planetary carrier so that the engine brake is effective.

Path of power transmission

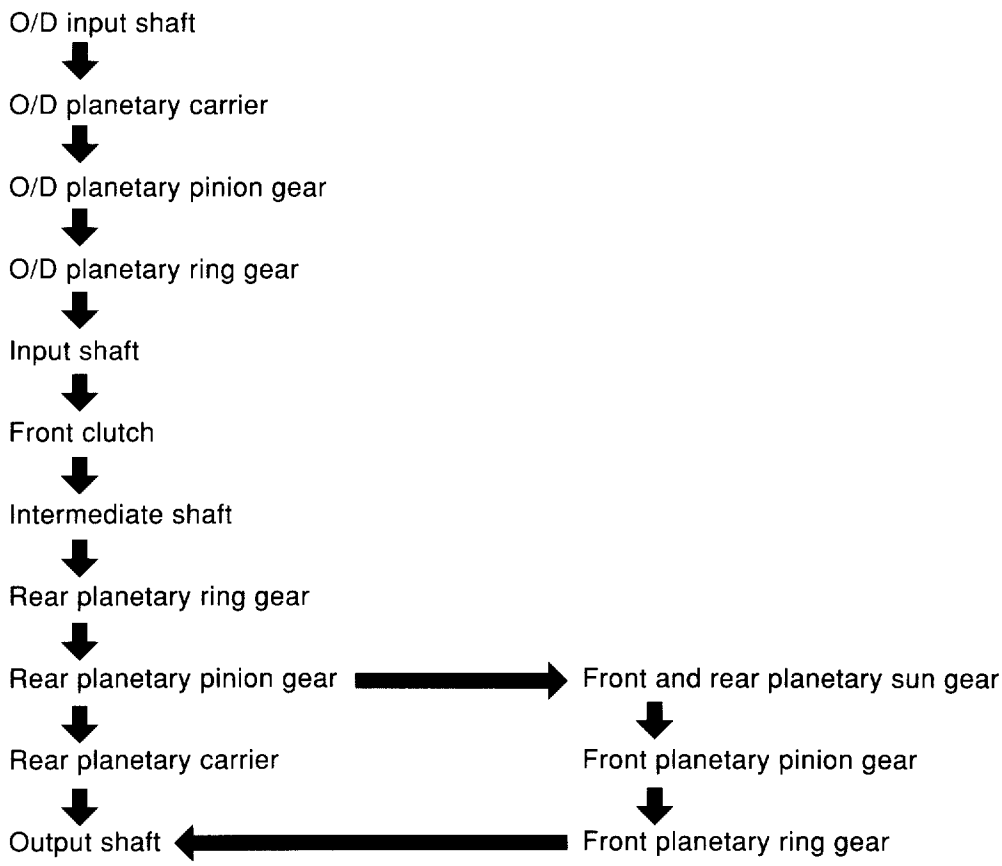

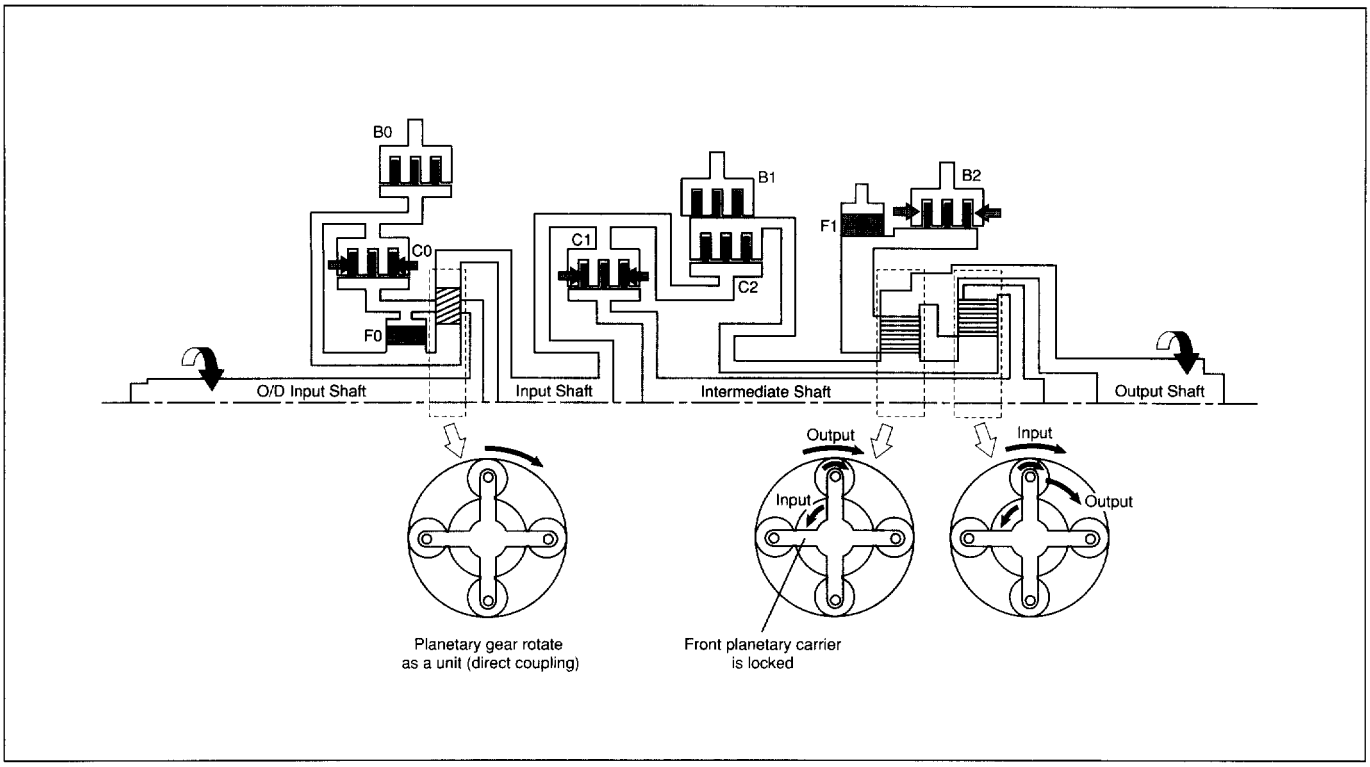

Figure 44. First Gear in 1 Range

R RANGE

In the R range, the O/D direct clutch (C0), O/D one-way clutch (F0), rear clutch (C2) and 1st and reverse brake (B2) are activated to form the reverse gear. The rotational force of the O/D input shaft is transmitted directly to the input shaft as does the 1st gear in the D or 2nd range. The rotational force of the input shaft is transmitted to the pinion gear of the front planetary gear as the rear clutch (C2) is active. However, since the front planetary carrier is locked by the 1st and reverse brake (B2), the rotational force of the sun gear is transmitted to the ring gear via the pinion gear so that the counterclockwise rotational force is transmitted to the output shaft.

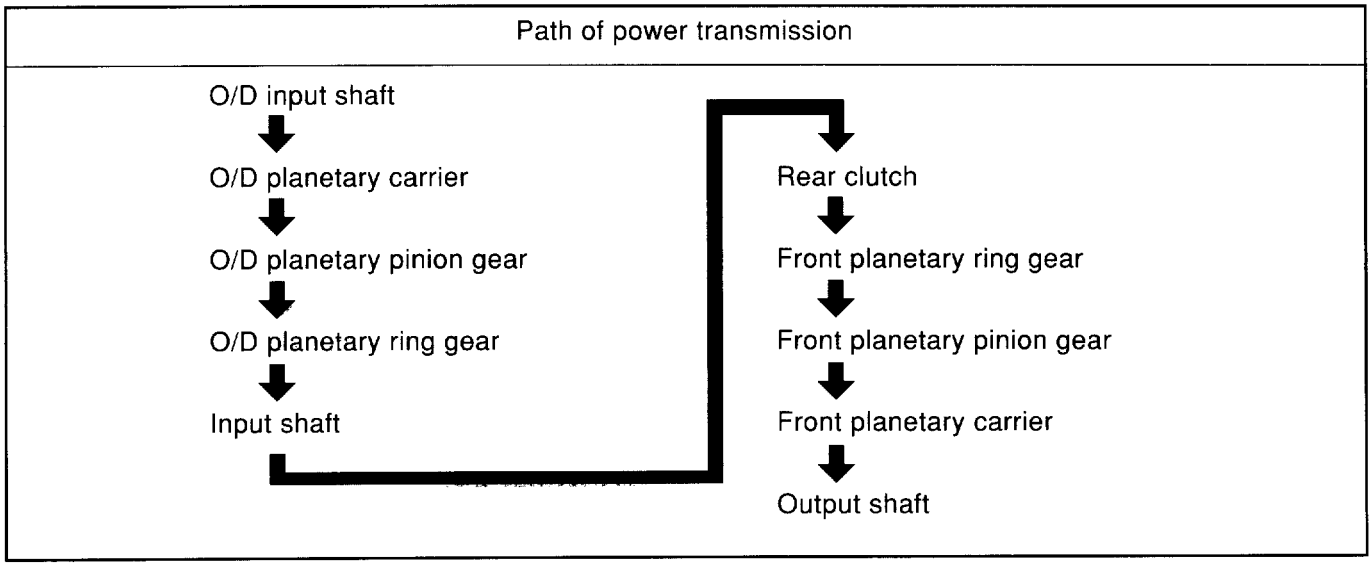

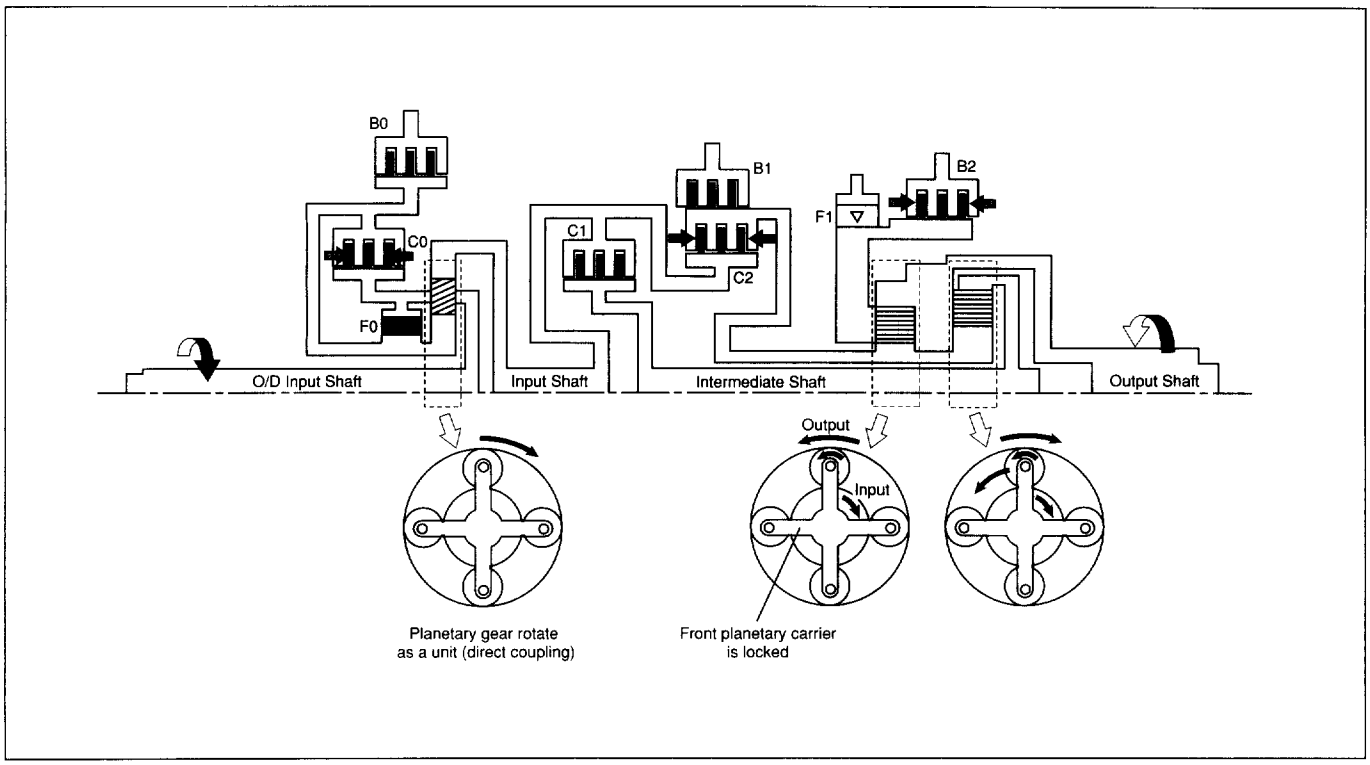

Figure 45. R Range

7A2 DIAGNOSIS

CONTENTS

SUBJECT **PAGE**

Description....7A2- 2
Diagnosis Procedure....7A2- 2
Self Diagnosis....7A2- 3
Self Diagnosis Information....7A2- 3
Clearing Memory of the Diagnostic Trouble Code (DTC)....7A2- 6
Identification of Transmission Control Module (TCM)....7A2- 7
Diagnosis Based on Diagnostic Trouble Code (DTC)....7A2- 8
DTC 11 Vehicle Speed Sensor 1....7A2- 9
DTC 13 Engine Speed Sensor....7A2-11
DTC 15 Automatic Transmission Fluid (ATF) Thermosensor....7A2-13
DTC 17 Inhibitor Switch....7A2-15
DTC 21 Throttle Position Sensor....7A2-17
DTC 24 Vehicle Speed Sensor 2....7A2-20
DTC 31 No.1 Shift Solenoid....7A2-22
DTC 32 No.2 Shift Solenoid....7A2-24
DTC 33 Timing Solenoid....7A2-26
DTC 34 Lock-up Solenoid....7A2-28
DTC 35 Line Pressure Solenoid....7A2-30
DTC 37 Exhaust Brake Cut System....7A2-32
Diagnosis Based on Vehicle Condition....7A2-34
Inspection Based on Faulty Symptom....7A2-36
Wiring Diagram....7A2-52
Parts Location....7A2-54
Connector Configurations....7A2-55
Control Signal Inspection....7A2-57
Line Pressure Test....7A2-62
Stall Test....7A2-64
Road Test....7A2-65
Shift Point Diagram and Lock-up Point Diagram....7A2-65
Diagnosis by Using Scan Tool....7A2-69
Special Tools....7A2-73

DESCRIPTION

DIAGNOSIS PROCEDURE

When the automatic transmission is out of order, something is wrong with the mechanical system or the electrical system such as the hydraulic circuit, friction element and Transmission Control Module (TCM), and complicated phenomena may occur sometimes. So, at the time of diagnosis, perform the self-diagnosis function, a stall test, a line pressure test or a road test to reproduce such abnormal phenomena so as to fully understand what is out of order before starting inspection, adjustment or overhaul.

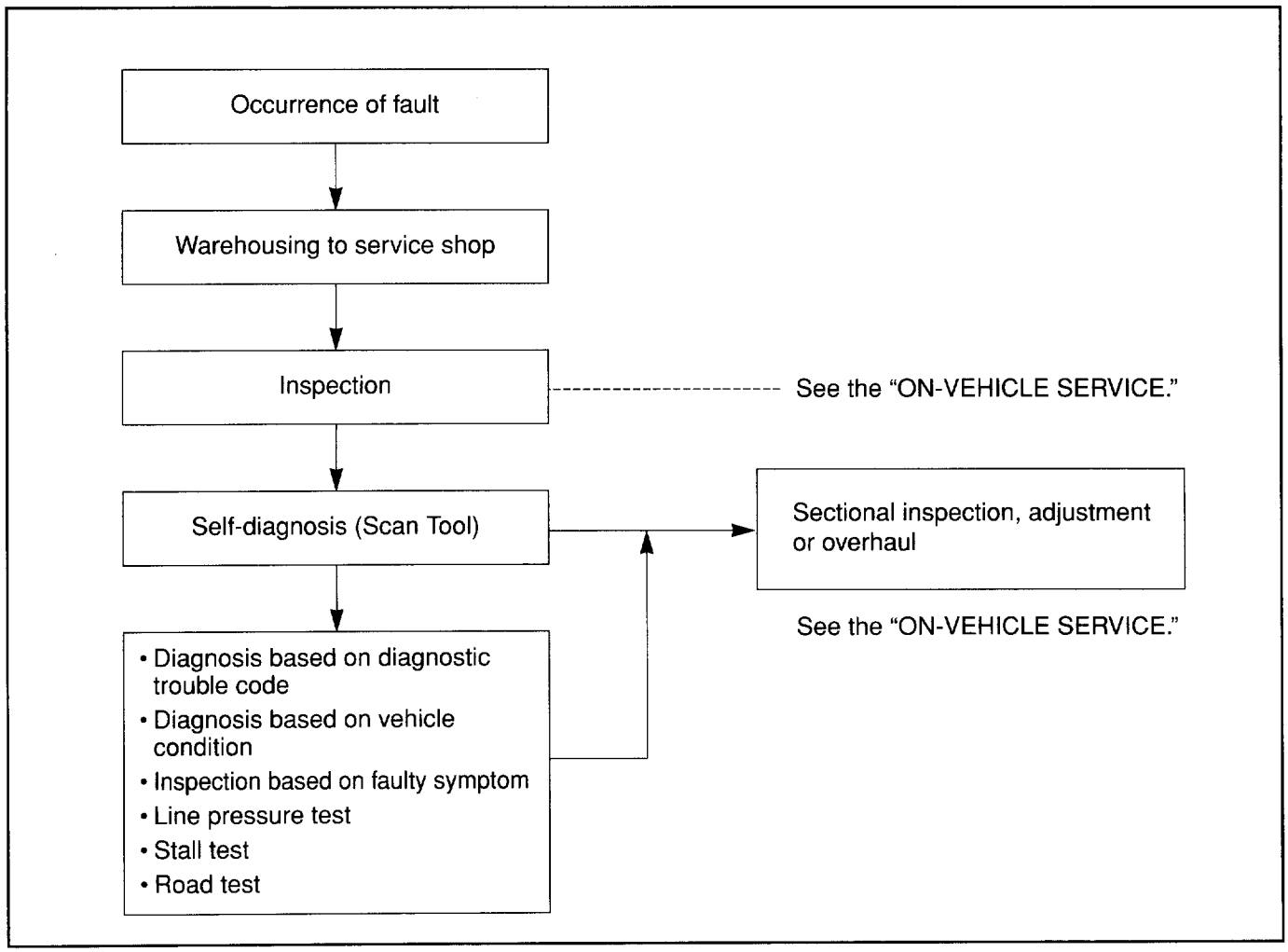

Figure 1. Diagnosis Procedure

SELF DIAGNOSIS

SELF DIAGNOSIS INFORMATION

The transmission control module of this system has the function of self diagnosis. If any trouble occurs in this system, the check trans light functions to inform operator of possible troubles related to the following 12 components.

1. Vehicle speed sensor-1
   (Installed on the Transmission)
2. Engine speed sensor
3. Automatic transmission fluid thermosensor
4. Inhibitor switch
5. Throttle position sensor
6. Vehicle speed sensor-2
   (Fitted on the speedometer driven gear)
7. No.1 shift solenoid
8. No.2 shift solenoid
9. Timing solenoid
10. Lock-up solenoid
11. Line pressure solenoid
12. Exhaust brake cut

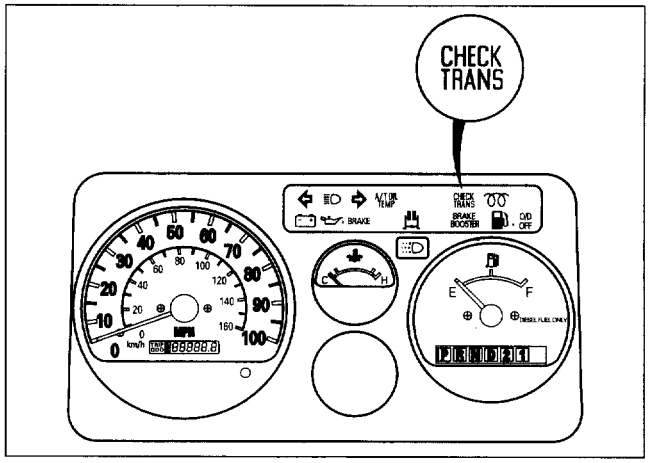

Figure 2. Check Trans Light

Indication of the Check Trans Light with the Key Switch Turned On (User Mode)

When the throttle position sensor, vehicle speed sensor, solenoids, etc., starts to malfunction when the vehicle is running (the key switch turned on), the check trans light blinks to warn the driver (figure 3).

- The check trans light begins to blink as soon as a problem occurs during driving, and keeps blinking until it is corrected.

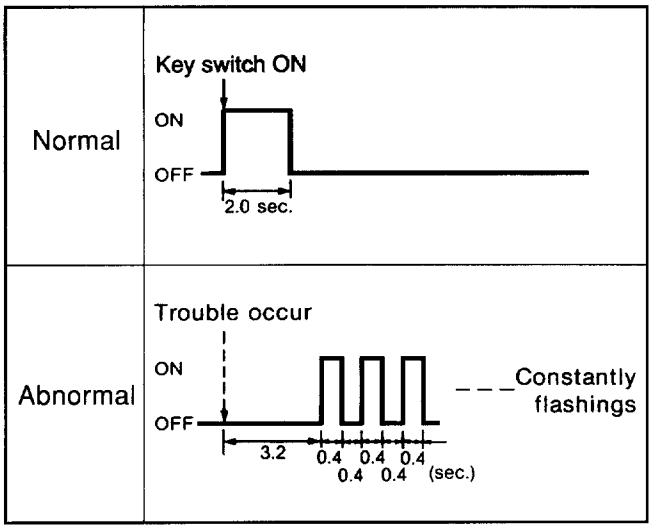

Figure 3. Check Trans Light Display

Indication of the Check Trans Light During Self-Diagnosis (Dealer Mode)

To help the mechanic locate the problem more easily, the check trans light blinks in different cycles. Each cycle represents one of the eleven possible sources of problem.

Indication of Self-Diagnostic Results

A diagnostic trouble code (DTC) registered in memory can be displayed by the connection of terminal 11 and 4 or 5 of the data link connector (DLC).

The DLC is the black 16-pin connector and it is tied to the support bracket locating under the brake and clutch fluid tank.

- When no problem exists, the display flashes "1" repeatedly (figure 4-A).
- When a malfunction exists, the appropriate DTC is displayed three times repeatedly (figure 4-B).
- When two or more DTCs are registered, they are all displayed three times repeatedly, one at a time, starting with the lowest code number (figure 4-C).

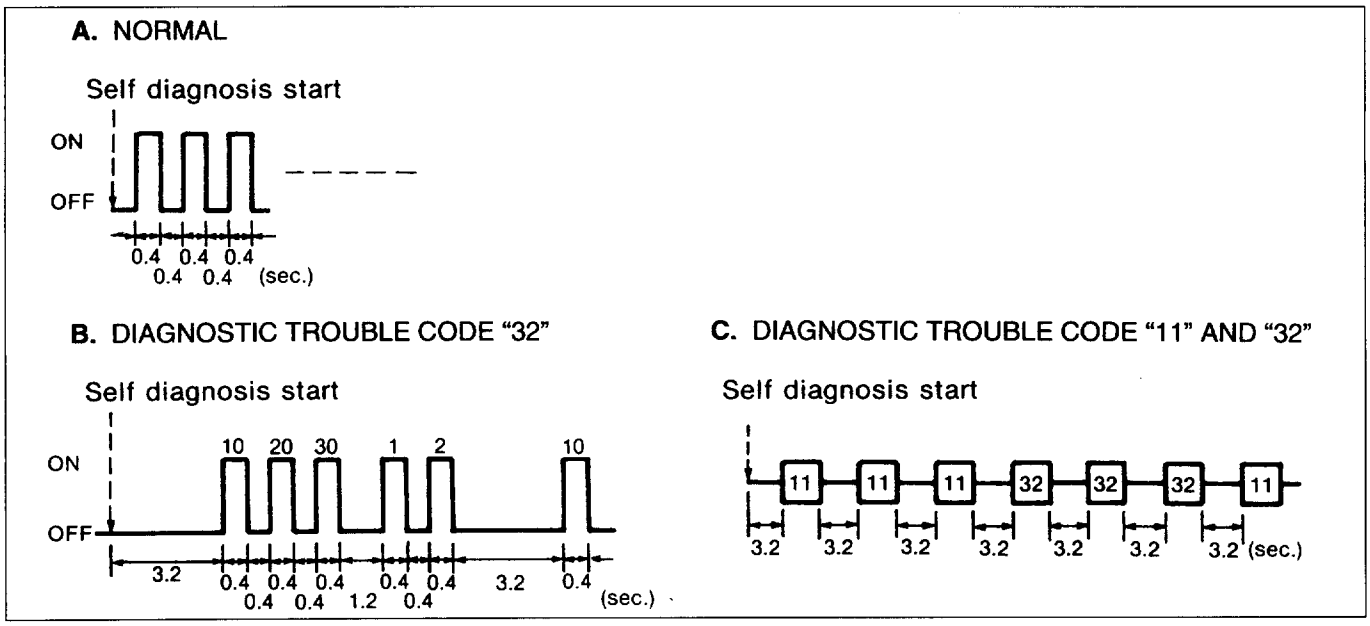

Figure 4. Self Diagnosis Display

Diagnostic Trouble Codes (DTC)

DTC No.	DISPLAY PATTERN	DIAGNOSED CONTENT	REFERENCE
11	ON OFF	Vehicle speed sensor 1 circuit open or shorted (Fitted to transmission)	7A2-9
13		Engine speed sensor circuit open or shorted	7A2-11
15		Automatic transmission fluid thermosensor circuit open	7A2-13
17		Inhibitor switch circuit open or shorted	7A2-15
21		Throttle position sensor circuit open or shorted	7A2-17
24		Vehicle speed sensor 2 circuit open or shorted (Built into speedometer)	7A2-20
31		No.1 shift solenoid (S1) circuit open or shorted	7A2-22
32		No.2 shift solenoid (S2) circuit open or shorted	7A2-24
33		Timing solenoid (ST) circuit open or shorted	7A2-26
34		Lock-up solenoid circuit open or shorted	7A2-28
35		Line pressure solenoid circuit open or shorted	7A2-30
37		Exhaust brake cut system circuit open or shorted	7A2-32

Figure 5. Diagnostic Trouble Code

CLEARING MEMORY OF THE DIAGNOSTIC TROUBLE CODE (DTC)

1) To clear the memory in TCM, use Tech-2 (Scan Tool).
2) To clear the memory in TCM without Tech-2, perform the following operation at once and keep more than 5 seconds.
   - Turn the key switch to ON position, but do not start the engine.
     (= No engine RPM/No vehicle speed)
   - Connect terminal 1 and 3 of the DLC.
     (= Self-diagnosis is started)
   - Select "N" (Neutral) range.
     (= "N" range signal is sent)
   - Depress brake pedal fully.
     (= Brake switch is ON)
   - Depress accelerator pedal fully.
     (= Kick-down switch is ON)

   If the memory is cleared normally in this procedure, the check trans light flashes rapidly ("ON"–0.2 sec, "OFF"–0.2 sec) for 10 seconds.

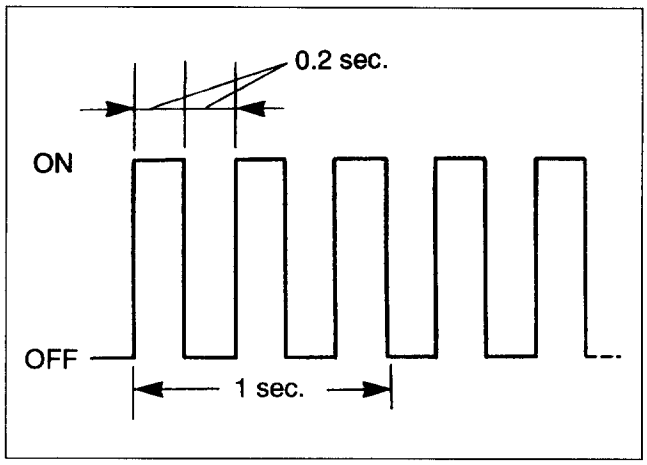

Figure 6. First Flashing Pattern After Clearing Memory

IDENTIFICATION OF TRANSMISSION CONTROL MODULE (TCM)

A: ISUZU part No. : 8972050330(LHD)
8972050340(RHD)
B: AISIN part No. : 86410-0423(LHD)
86410-0463(RHD)

C: Manufactured date
Ex. : 9 F 14

- 9 → Year ; 1999
- F → Month ; June
  A: January
  B: February
  ⋮
  L: December
- 14 → Day

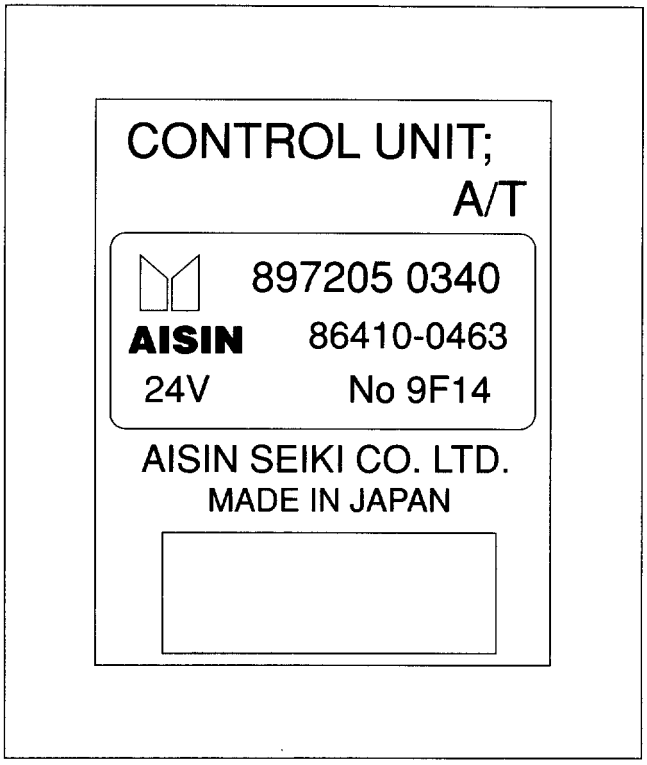

Figure 7. Identification of TCM

DIAGNOSIS BASED ON DIAGNOSTIC TROUBLE CODE (DTC)

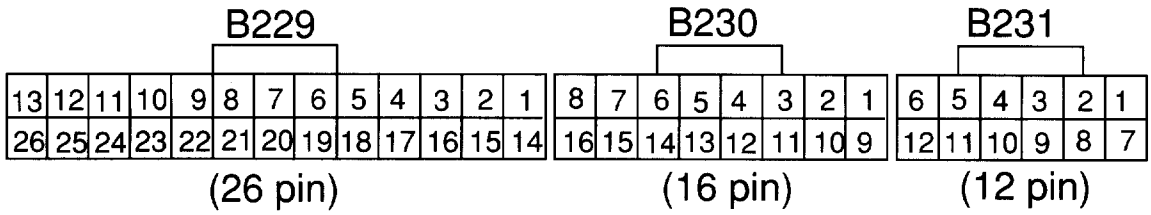

Pin No.	Function
B231-1	Ignition signal
B231-2	Battery ground
B231-3	Shift position; P range signal
B231-4	Shift position; N range signal
B231-5	Not used
B231-6	Shift position; 1 range signal
B231-7	Not used
B231-8	Battery ground
B231-9	Shift position; R range signal
B231-10	Shift position; D range signal
B231-11	Shift position; 2 range signal
B231-12	Brake switch
B230-1	Exhaust brake signal
B230-2	Not used
B230-3	Not used
B230-4	Idle up signal
B230-5	Not used
B230-6	O/D OFF switch
B230-7	Kick-down switch
B230-8	Diagnostic enable signal
B230-9	Not used
B230-10	Not used
B230-11	Not used
B230-12	Not used
B230-13	Not used
B230-14	Not used
B230-15	ATF temperature switch
B230-16	Idle signal

Pin No.	Function
B229-1	Engine speed sensor
B229-2	Not used
B229-3	Vehicle speed sensor (Transmission/+)
B229-4	Vehicle speed sensor (Speedometer)
B229-5	Throttle position sensor
B229-6	ATF thermosensor (+)
B229-7	Not used
B229-8	Not used
B229-9	Check trans indicator light
B229-10	Not used
B229-11	Timing solenoid (ST)
B229-12	No.2 shift solenoid (S2)
B229-13	No.1 shift solenoid (S1)
B229-14	Not used
B229-15	Shield for No. B229-3
B229-16	Vehicle speed sensor (Transmission/–)
B229-17	Not used
B229-18	Throttle position sensor voltage
B229-19	Throttle position sensor ground
B229-20	ATF thermosensor (–)
B229-21	Serial data (Scan tool)
B229-22	Exhaust brake cut signal
B229-23	Not used
B229-24	Lock-up solenoid
B229-25	Line pressure solenoid (–)
B229-26	Line pressure solenoid (+)

Figure 8. TCM Connector Pin Layout

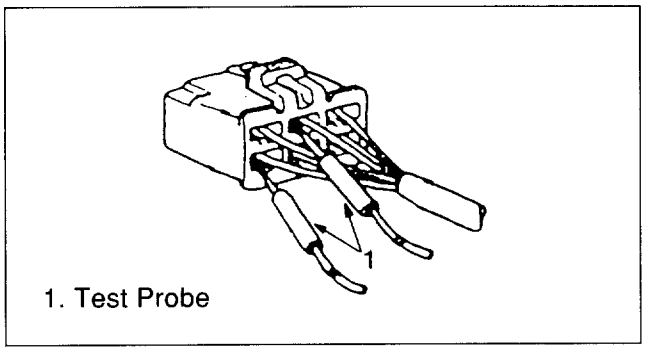

Figure 9. Connector Inspection

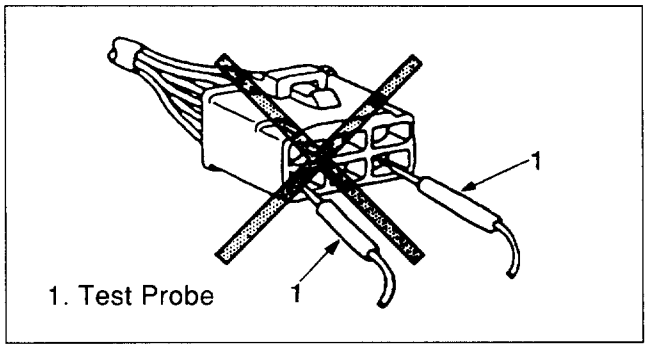

Figure 10. Connector Inspection

Connector Inspection

Use circuit tester to check the connector for continuity. Insert the test probes (1) from the connector wire side (figure 9).

CAUTION: Never insert the circuit tester test probes (1) into the connector open side to test the continuity (figure 10).
Broken or open connector terminals will result.

DIAGNOSTIC TROUBLE CODE (DTC) 11
VEHICLE SPEED SENSOR 1
(Wire Breaking/Short Circuit)

Explanation of Circuit: Vehicle speed information is sent from the vehicle speed sensor 1 to the Transmission Control Module (TCM). This sensor is provided in the transmission rear cover.
The vehicle speed sensor 1 is an electromagnetic pulse pickup type that generates a speed signal according to the revolution of the transmission output shaft (18 pulses at a single revolution of the output shaft). As a result, the sensor sends a sine wave signal to the TCM, which converts this sine wave signal (pulse voltage) into a km/h (mph) signal.

Explanation of Test: The following numbers correspond to the numbers enclosed with a circle in the diagnosis chart.
① When the vehicle is running, a speed signal is input from the vehicle speed sensor 1 into the TCM.
② At this test, the continuity of circuit wiring and the vehicle speed sensor 1 is checked.

Diagnostic Aids: A temporary failure may be caused by faulty connection, worn-away wire insulator or internal wire breaking of insulator. Check if any of the following conditions is provided in the TCM harness connector: Terminal positional shift, improper junction, lock damage, improper terminal shape or damage, faulty wire connection of terminal, and harness damage.

TCM Voltage Check: Refer to page 7A2-57.

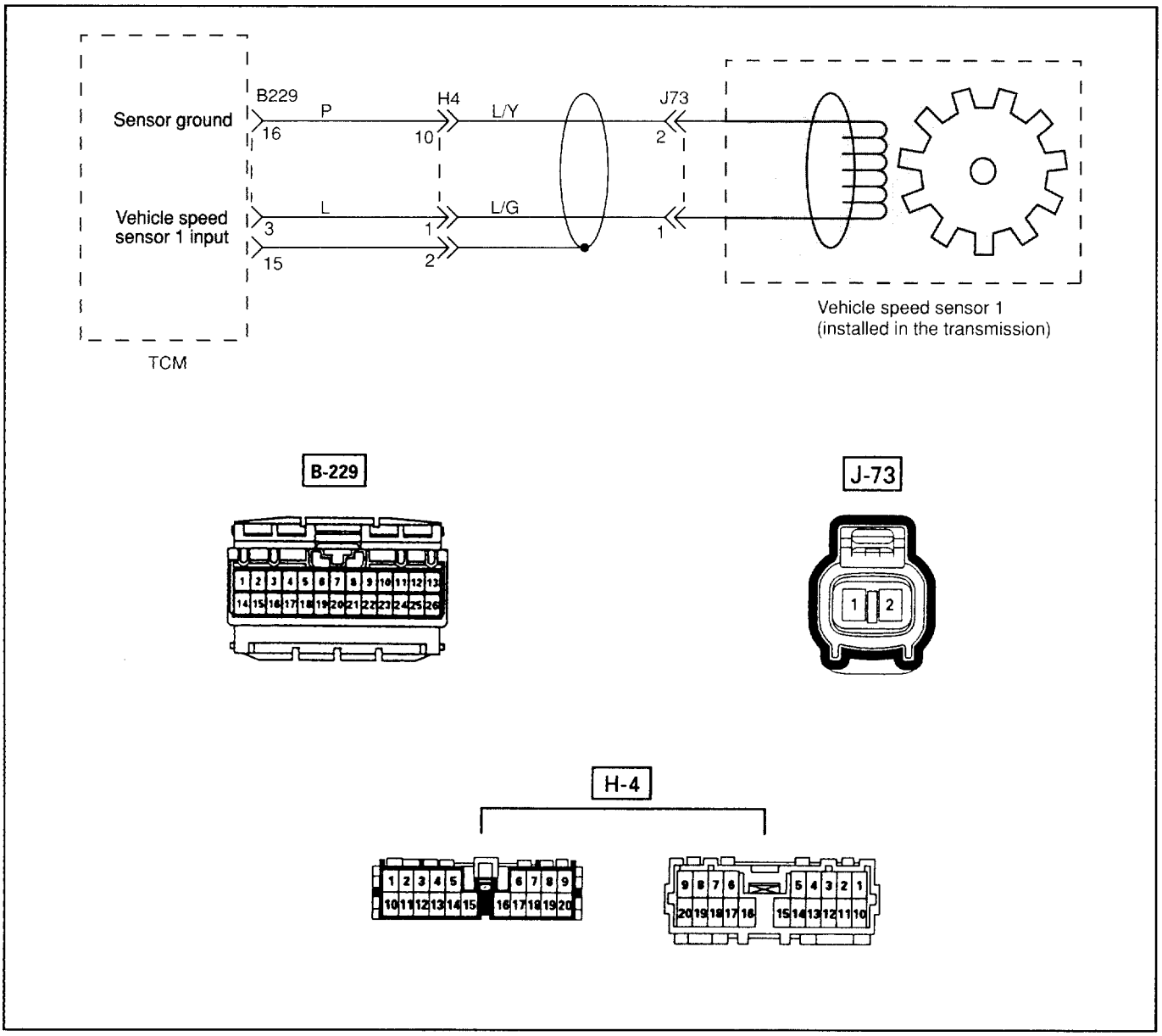

DIAGNOSTIC TROUBLE CODE (DTC) 11
VEHICLE SPEED SENSOR 1
(Wire Breaking/Short Circuit)

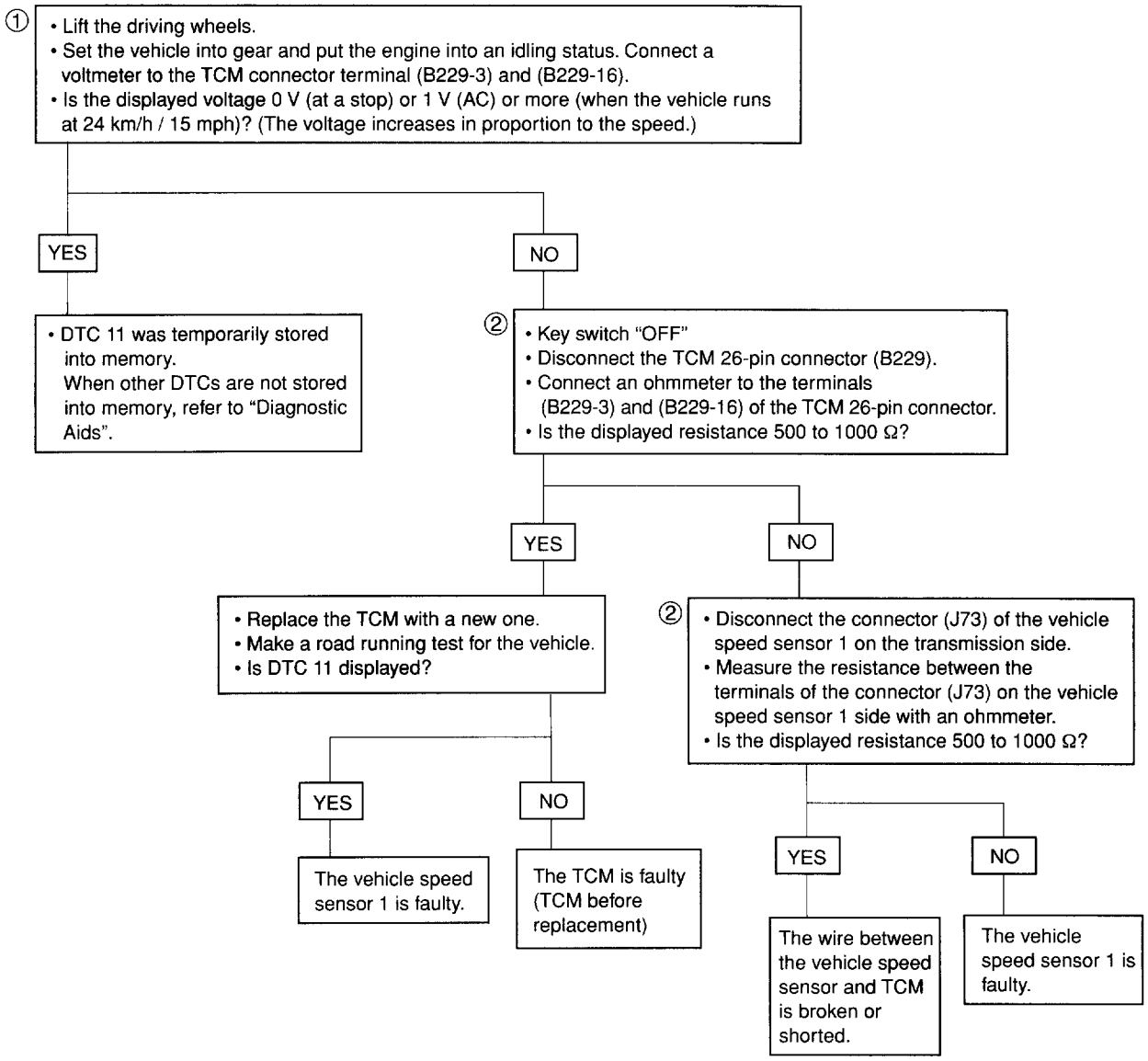

AC: Alternating Current
TCM: Transmission Control Module

DIAGNOSTIC TROUBLE CODE (DTC) 13
ENGINE SPEED SENSOR
(Wire Breaking/Short Circuit)

Explanation of Circuit: Engine speed (RPM) signals are sent from the engine speed sensor to the Transmission Control Module (TCM).
The engine speed sensor is an electromagnetic pulse pickup type that generates signals when the fuel timing gear revolves (35 pulses at a single revolution of the timing gear).
The TCM converts these sine wave signals into engine speed (RPM) signals.

Explanation of Test: The following numbers correspond to the numbers enclosed with a circle in the diagnosis chart.

① Engine speed signals are input from the engine speed sensor into the TCM.
② When the engine speed is 2000 RPM, the voltage varies within the range of 0 to 1 V (AC intermittently).
The voltage increases in proportion to engine revolution speed.

Diagnostic Aids: A temporary failure may be caused by faulty connection, worn-away wire insulator or internal wire breaking of insulator. Check if any of the following conditions is provided in the TCM harness connector: Terminal positional shift, improper junction, lock damage, improper terminal shape or damage, faulty wire connection of terminal, and harness damage.

TCM Voltage Check: Refer to page 7A2-57.

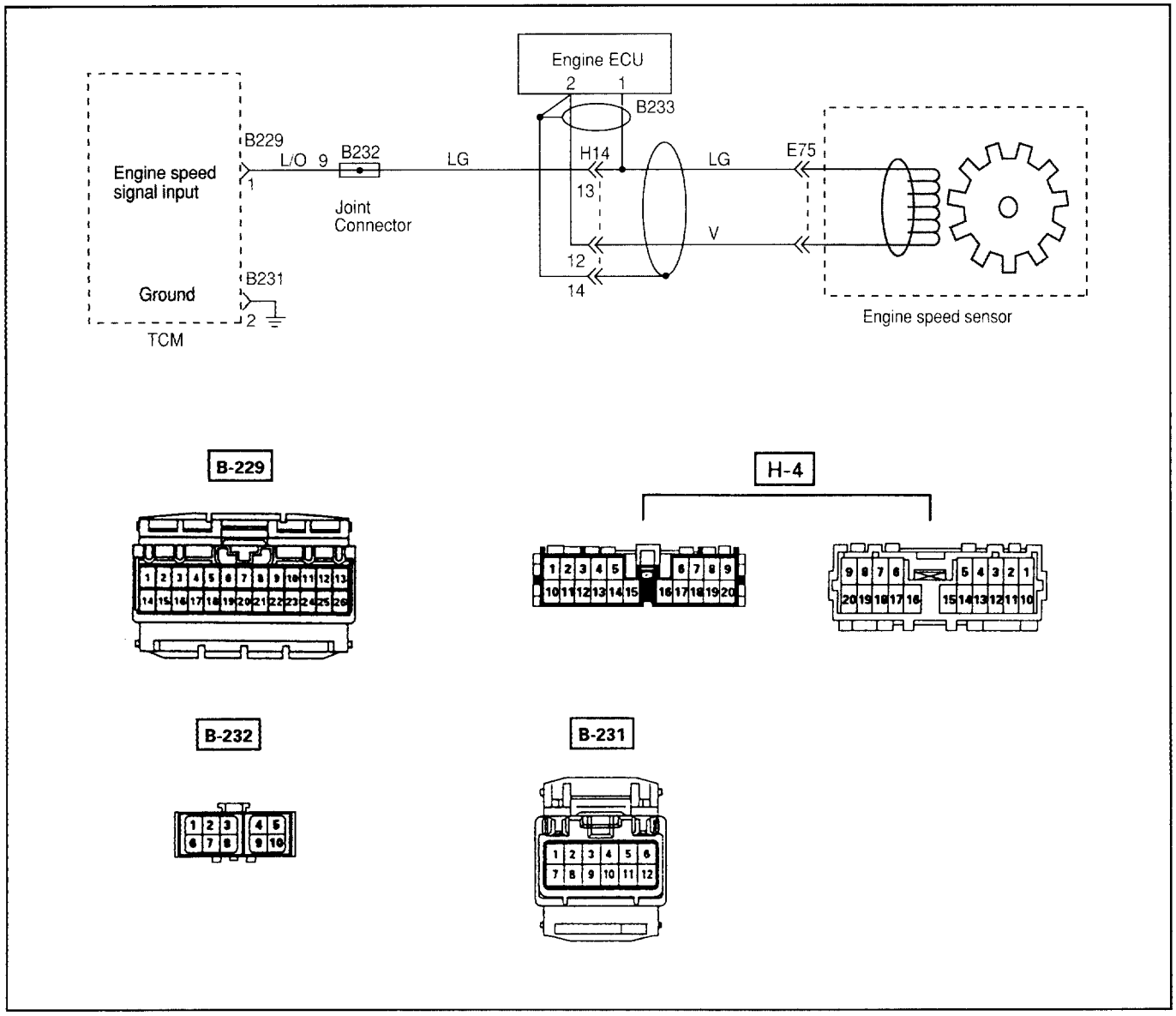

DIAGNOSTIC TROUBLE CODE (DTC) 13
ENGINE SPEED SENSOR
(Wire Breaking/Short Circuit)

- Key switch "ON" and engine "ON"
- Start the engine.
- Drive the vehicle in "D" range, higher than 20 mph, 2 minutes or more. Try this procedure twice (2 trips).
- Key switch "ON" and engine "OFF"
- Is DTC 13 displayed by self-diagnosis?

DTC 13 is displayed.

DTC 13 is not displayed.

DTC 13 was temporarily stored into memory. Refer to "Diagnostic Aids".

①
- Engine "OFF" and Key switch "ON"
- Connect a voltmeter to the TCM connector terminals (B229-1) and (B231-2). Is the voltage 0 V?

YES

NO

Wire breaking or voltage short circuit

②
- Key switch "ON" and engine "ON"
- Connect a voltmeter to the TCM connector terminals (B229-1) and (B231-2). Is the voltage under the range of 0 - 1 V (AC intermittently) when the engine speed is about 2,000 RPM? Does the voltage increase as the engine speed is increased?

YES

NO

The TCM connection is faulty or the TCM is faulty.

The wire is ground-shorted or the engine speed sensor is faulty.

AC: Alternating Current
TCM: Transmission Control Module

DIAGNOSTIC TROUBLE CODE (DTC) 15
AUTOMATIC TRANSMISSION FLUID (ATF) THERMOSENSOR
(Wire Breaking/Short Circuit or Voltage Drop)

Explanation of Circuit: The ATF thermosensor is a thermistor sensor that is installed in the transmission valve body and converts temperature changes into continuous electric signals, then outputs them to the Transmission Control Module (TCM). When the ATF temperature is low, the resistance of the sensor (thermistor) goes up, so that the voltage of the TCM signal becomes high.
As the ATF is gradually warmed, the resistance of the sensor goes down and the voltage becomes low. At the normal operating ATF temperature (80°C/176°F) of the transmission, the voltage of the TCM is about 0.4 V.

Explanation of Test: The following numbers correspond to the numbers enclosed with a circle in the diagnosis chart.

① Check that the voltage of the ATF thermosensor varies with ATF temperatures.
② Check that the resistance of the ATF thermosensor varies with ATF temperatures.

Diagnostic Aids: A temporary failure may be caused by faulty connection, worn-away wire insulator or internal wire breaking of insulator. Check if any of the following conditions is provided in the TCM harness connector: Terminal positional shift, improper junction, lock damage, improper terminal shape or damage, faulty wire connection of terminal, and harness damage.

TCM Voltage Check: Refer to pages 7A2-57.

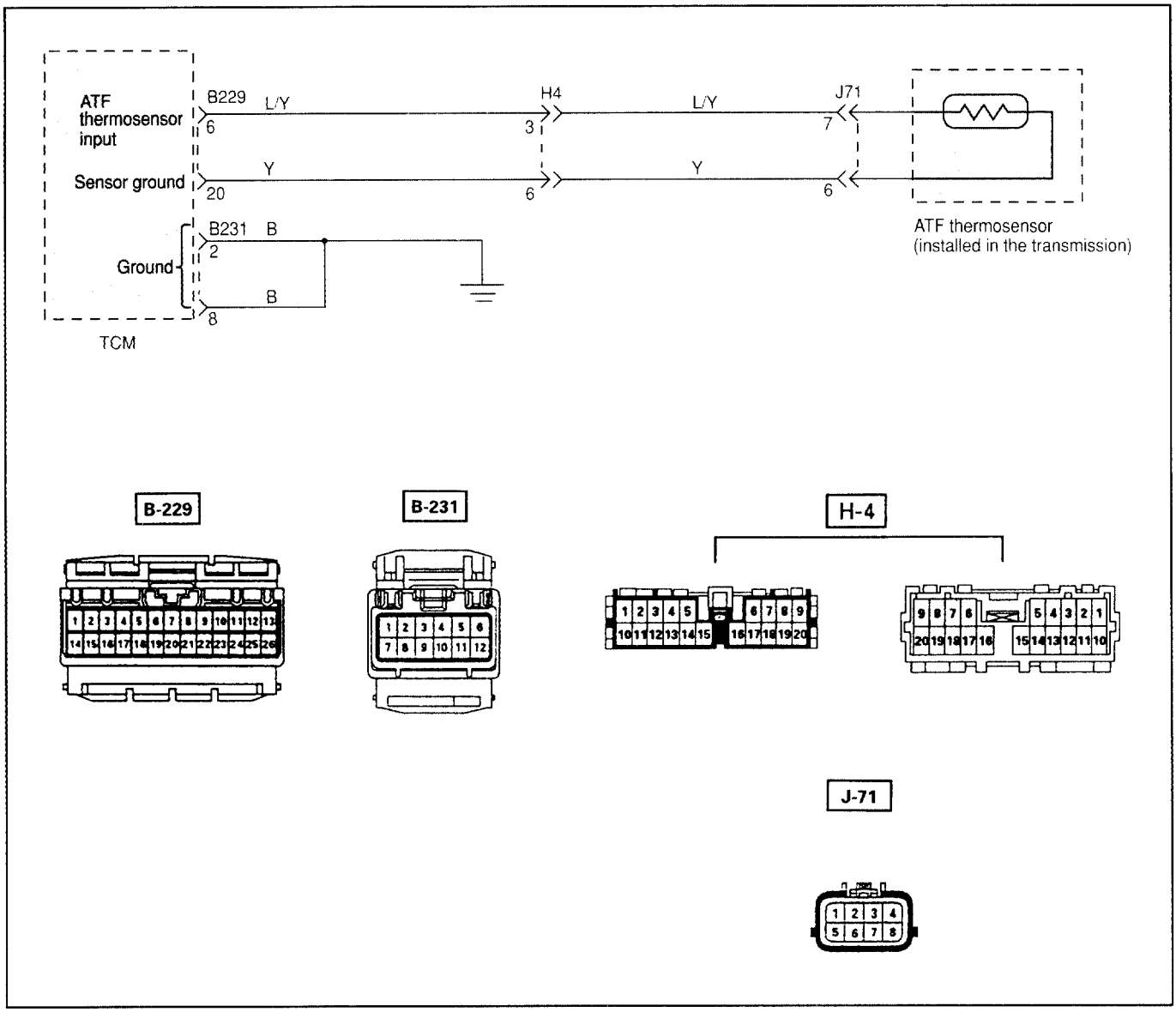

DIAGNOSTIC TROUBLE CODE (DTC) 15 AUTOMATIC TRANSMISSION FLUID (ATF) THERMOSENSOR OR BATTERY BACK-UP VOLTAGE (Wire Breaking/Short Circuit or Voltage Drop)

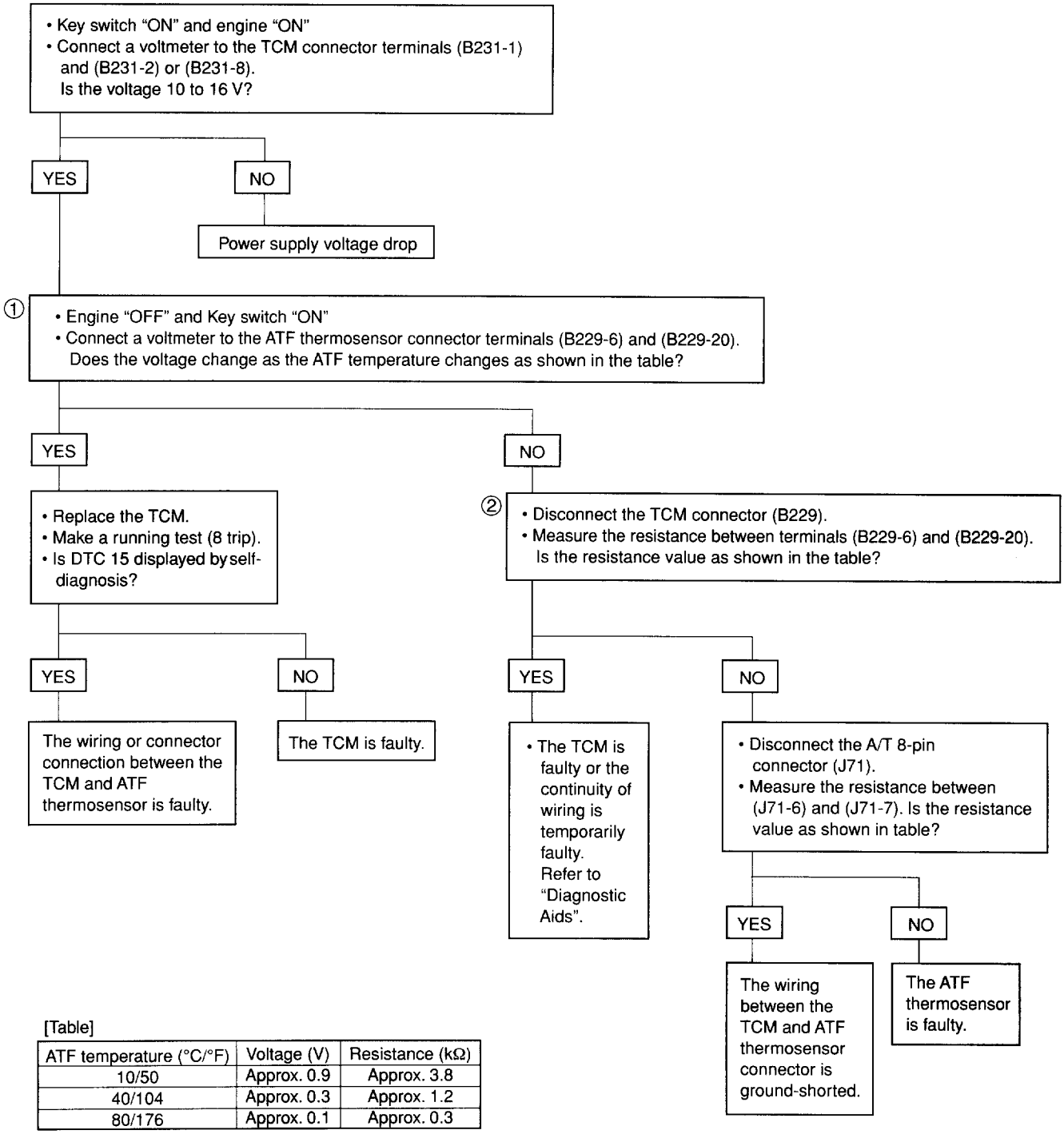

[Table]

ATF temperature (°C/°F)	Voltage (V)	Resistance (kΩ)
10/50	Approx. 0.9	Approx. 3.8
40/104	Approx. 0.3	Approx. 1.2
80/176	Approx. 0.1	Approx. 0.3

A/T: Automatic Transmission
TCM: Transmission Control Module

DIAGNOSTIC TROUBLE CODE (DTC) 17
INHIBITOR SWITCH
(Wire Breaking or Multiplex Signal)

Explanation of Circuit: The inhibitor switch gives the signals related to the selector lever position (PRND21) to the Transmission Control Module (TCM). The inhibitor switch turns on when the select lever is shifted to the P, R, N, D, 2 or 1 range. The inhibitor switch, which is connected to the starter switch circuit, is available only when the select lever is in the P or N range.
The inhibitor switch is connected to the transmission manual shaft and installed in the transmission case.

Explanation of Test: The following numbers correspond to the numbers enclosed with a circle in the diagnosis chart.

① It is judged whether the input signal received from the inhibitor switch by the TCM is proper or not.
② The power status of the inhibitor switch is checked.
③ The continuity between inhibitor switch terminals and the continuity of the wire connected to the solenoid are checked.

Diagnostic Aids: A temporary failure may be caused by faulty connection, worn-away wire insulator, internal wire breaking of insulator. Check if any of the following conditions is provided in the TCM harness connector: Terminal positional shift, improper junction, lock damage, improper terminal shape or damage, faulty wire connection of terminal, and harness damage.

CAUTION: Before continuing checking, adjust the shift linkage. After completion of the adjustment, clear DTCs and make a running test for the vehicle. Check that the trouble has been repaired by self-diagnosis.

TCM Voltage Check: Refer to pages 7A2-57.

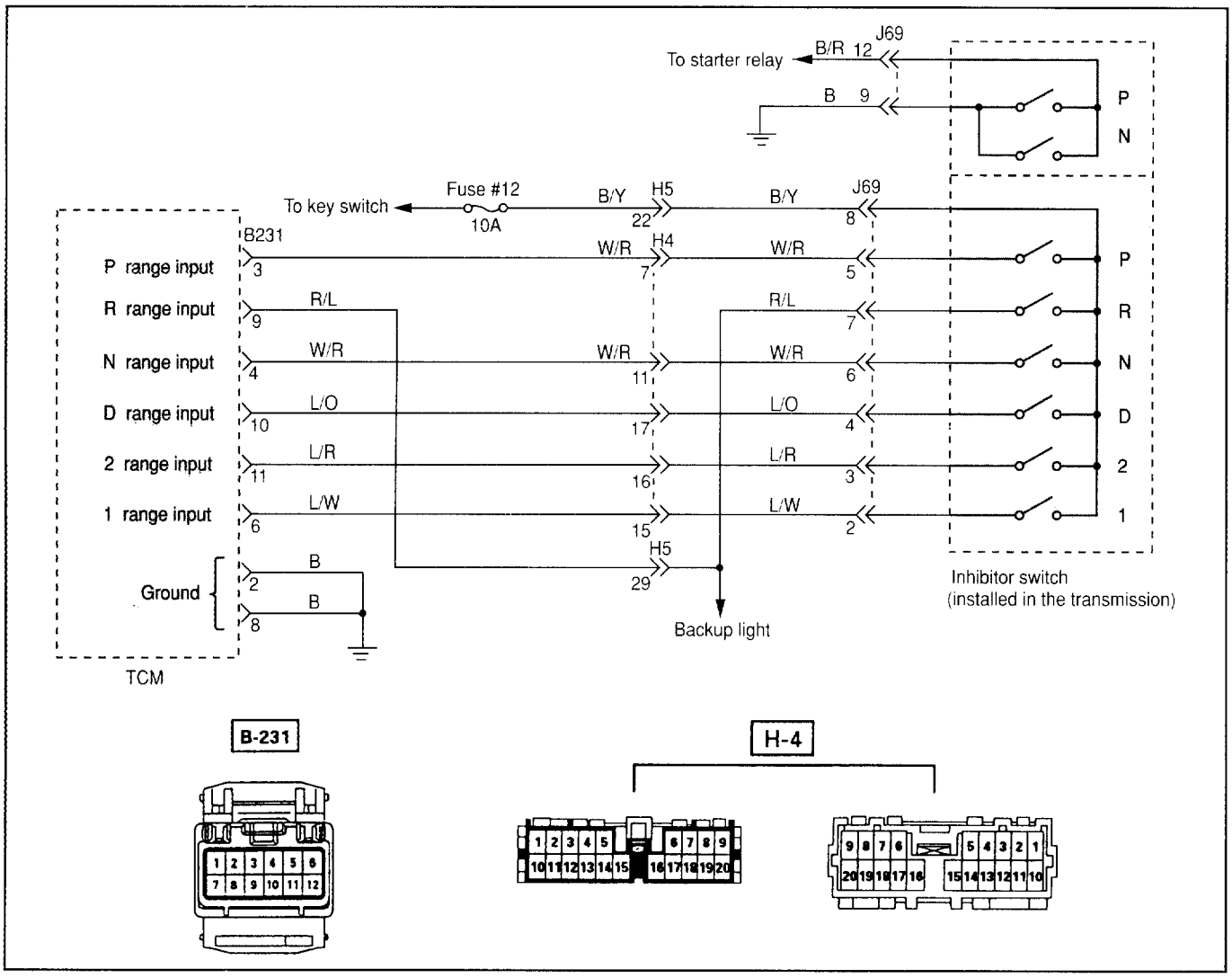

DIAGNOSTIC TROUBLE CODE (DTC) 17
INHIBITOR SWITCH
(Wire Breaking or Multiplex Signal)

①
- Engine "OFF" and key switch "ON"
- Connect a voltmeter to the each terminal of the TCM connectors (B231) and grounding terminal (B231-2 or B231-8).
- Measure the voltage shifting the select lever to every position. (Comparison with Table 1)
- Is the displayed voltage at every position normal?

(Table 1)

⊖ Terminal	⊕ Terminal	Voltage (V)
B231-2 or B231-8	B231-3	10 - 16: P range 1 or less: Others than P range
	B231-9	10 - 16: R range 1 or less: Others than R range
	B231-4	10 - 16: N range 1 or less: Others than N range
	B231-10	10 - 16: D range 1 or less: Others than D range
	B231-11	10 - 16: 2 range 1 or less: Others than 2 range
	B231-6	10 - 16: 1 range 1 or less: Others than 1 range

YES

- Clear the memory.
- Make a running test. (greater than 30 sec)

Is DTC 17 displayed by self-diagnosis?

YES

The TCM is faulty or the continuity of wiring is temporarily faulty. Refer to "Diagnostic Aids".

NO

The continuity of wiring is temporarily faulty. Refer to "Diagnostic Aids".

NO

Is the displayed voltage at every position abnormal?

YES

②
- Check if there is any wire breaking in the fuse and wire connected to the connector terminal (J69-8) of the inhibitor switch.
- Check the adjusted condition of the inhibitor switch.
- If no fault is found, replace the inhibitor switch.

NO

③
- Disconnect the connectors (J69) of the inhibitor switch.
- Make a continuity check between inhibitor switch terminals with an ohmmeter. (Table 2) Is the result OK?

YES

Wire breaking or a short circuit between the TCM connector and the inhibitor switch connector.

NO

Replace the inhibitor switch.

TCM: Transmission Control Module

(Table 2)

Terminal / Range	J69								
	2	3	4	5	6	7	8	9	12
P				○			○	○	○
R						○	○		
N					○		○	○	○
D			○				○		
2		○					○		
1	○						○		

○—○ Continuity

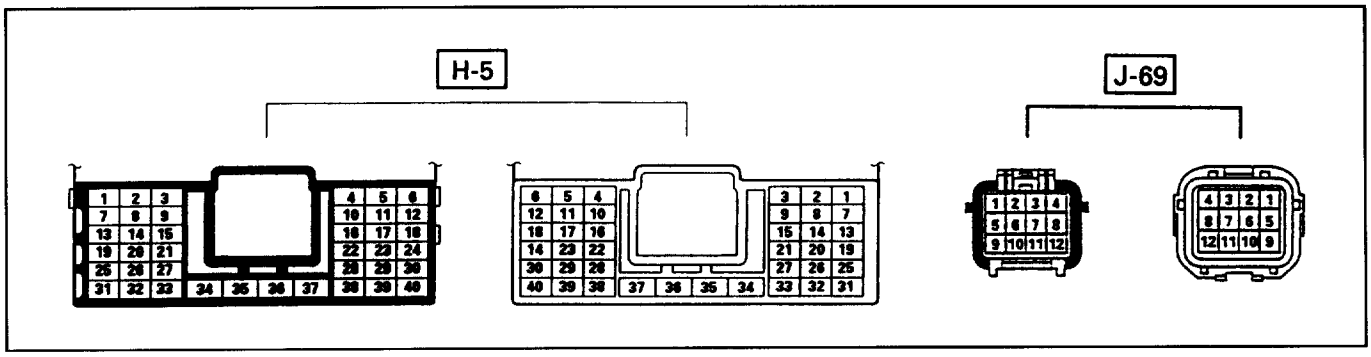

DIAGNOSTIC TROUBLE CODE (DTC) 21 THROTTLE POSITION (TP) SENSOR (Wire Breaking/Short Circuit)

Explanation of Circuit: When the signal of the TP sensor installed in the accel pedal is supplied to the Transmission Control Module (TCM), the TCM judges the opening condition of the throttle.
The shift point of the transmission is determined by this opening condition of the throttle.

Explanation of Test: The following numbers correspond to the numbers enclosed with a circle in the diagnosis chart.

① Check that the throttle input voltage is 3.8 to 4.5 V.
② At this test, check that as the throttle opens, the voltage goes down and that the voltage reaches 1.0 to 2.2 V at the full open status.
③ Check the power supply voltage (4.5 - 5.5 V) of the TP sensor.
④ Check the resistance (about 12 kΩ) between the TP sensor power supply voltage terminal and grounding terminal.
⑤ Check the resistance (Idle: 9.6 - 11.7 kΩ, Wide open throttle: 1 - 42kΩ) between the TP sensor input terminal and grounding terminal.
⑥ Check that the kick down switch input voltage is 10 to 16 V.
⑦ Check that the idle signal input voltage is 10 to 16 V.

Diagnostic Aids: A temporary failure may be caused by faulty connection, worn-away wire insulator or internal wire breaking of insulator.
Check if any of the following conditions is provided in the TP sensor and TCM harness connector: Terminal positional shift, improper junction, lock damage, improper terminal shape or damage, faulty wire connection of terminal, and harness damage.

TCM Voltage Check: Refer to pages 7A2-57.

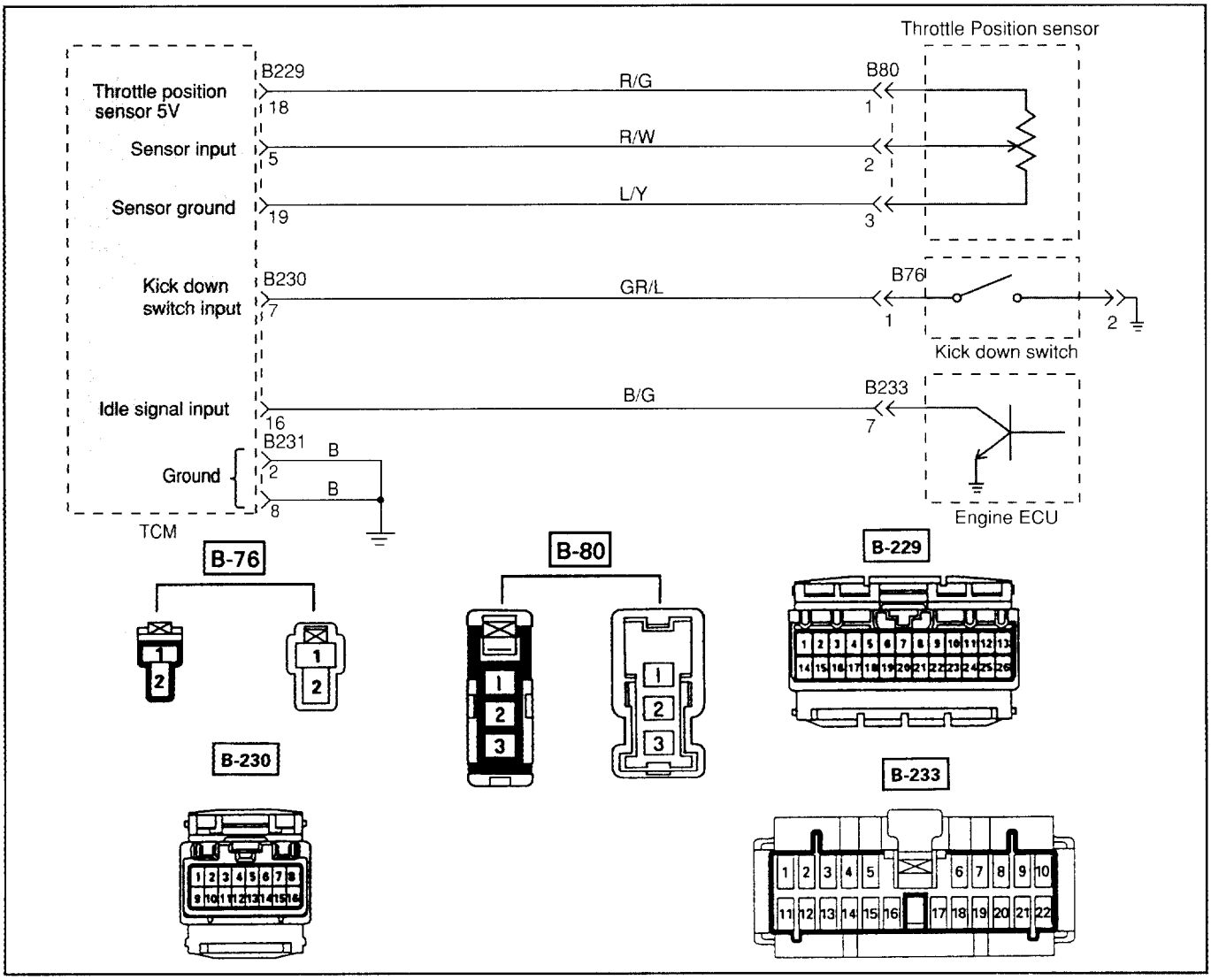

DIAGNOSTIC TROUBLE CODE (DTC) 21 THROTTLE POSITION (TP) SENSOR (Wire Breaking/Short Circuit)

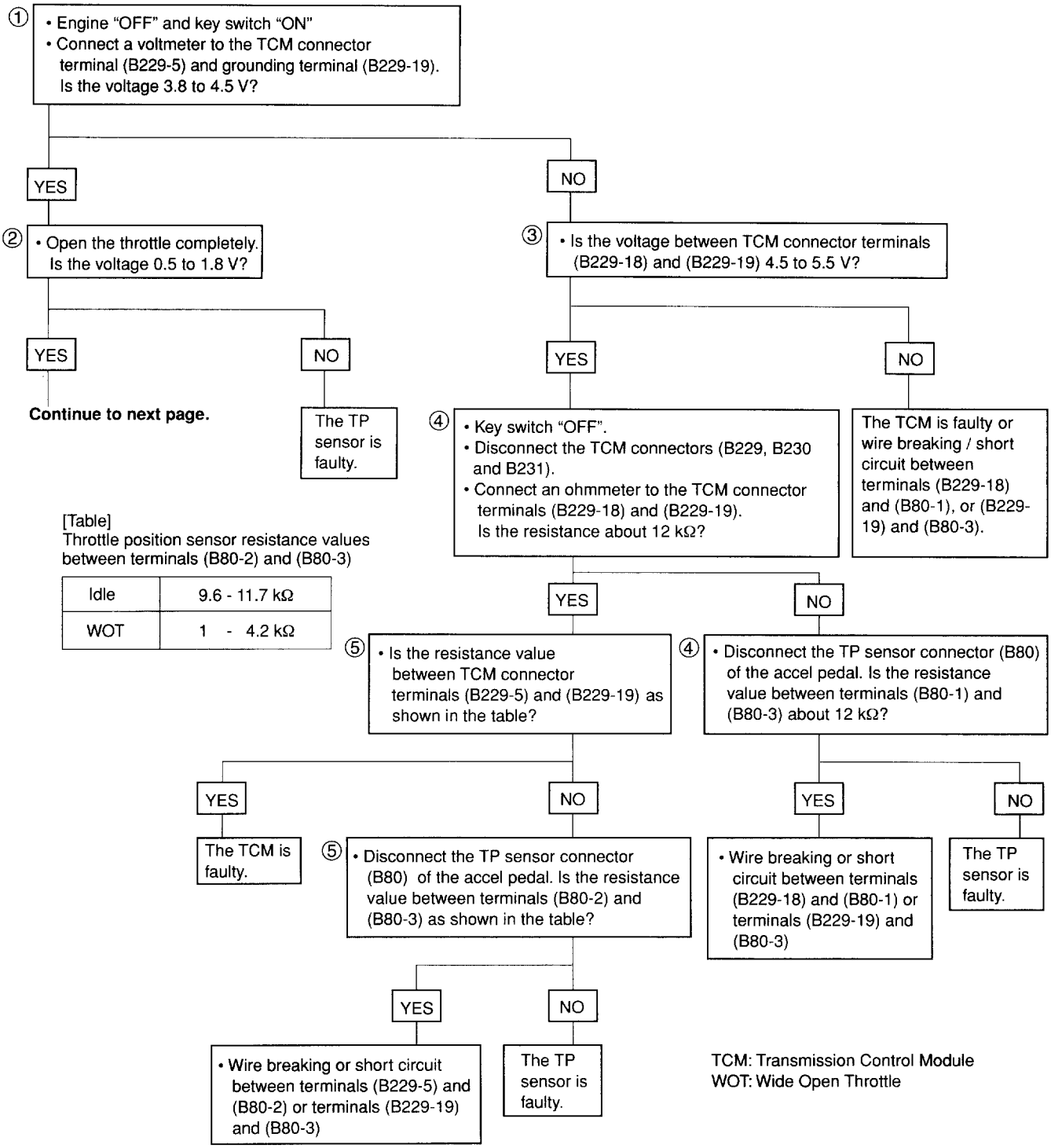

[Table]
Throttle position sensor resistance values between terminals (B80-2) and (B80-3)

Idle	9.6 - 11.7 kΩ
WOT	1 - 4.2 kΩ

TCM: Transmission Control Module
WOT: Wide Open Throttle

Continued

⑥ • Connect a voltmeter to the TCM connector terminal (B230-7) and grounding terminal (B231-2 or B231-8). Is the voltage 10 to 16 V?

- YES → ⑦
- NO → • Wire breaking or short circuit between terminals (B230-7) and (B76-1). • Kick down switch is faulty.

⑦ • Connect a voltmeter to the TCM connector terminal (B230-16) and grounding terminal (B231-2 or B231-8). Is the voltage 10 to 16 V?

- YES → • Engine "ON" • Is the voltage 0 V? And 10 to 16 V with depressed accel pedal?
- NO → The engine ECU is faulty.

• Engine "ON"
• Is the voltage 0 V?
And 10 to 16 V with depressed accel pedal?

- YES → Temporary failure. Refer to "Diagnostic Aids"
- NO → The engine ECU is faulty.

DIAGNOSTIC TROUBLE CODE (DTC) 24
VEHICLE SPEED SENSOR 2
(Wire Breaking/Short Circuit)

Explanation of Circuit: Vehicle speed information is provided by the vehicle speed sensor 2 to the speedometer.
In the speedometer, the pulses of the speed sensor are converted to speed signals (pulses), and these signals are output to the Transmission Control Module (TCM). The TCM converts these pulse voltages to km/h (MPH) signals.

Explanation of Test: The following numbers correspond to the numbers enclosed with a circle in the diagnosis chart.

① The cause of DTC 24 setting is due to the operation fault of the speedometer.

② Speed signals are output from the speedometer. The sensor power supply is given from the TCM.

Diagnostic Aids: A temporary failure may be caused by faulty connection, worn-away wire insulator or internal wire breaking of insulator. Check if any of the following conditions is provided in the output of the speedometer and the harness connector: Terminal positional shift, improper junction, lock damage, improper terminal shape or damage, faulty wire connection of terminal, and harness damage.

TCM Voltage Check: Refer to page 7A2-57.

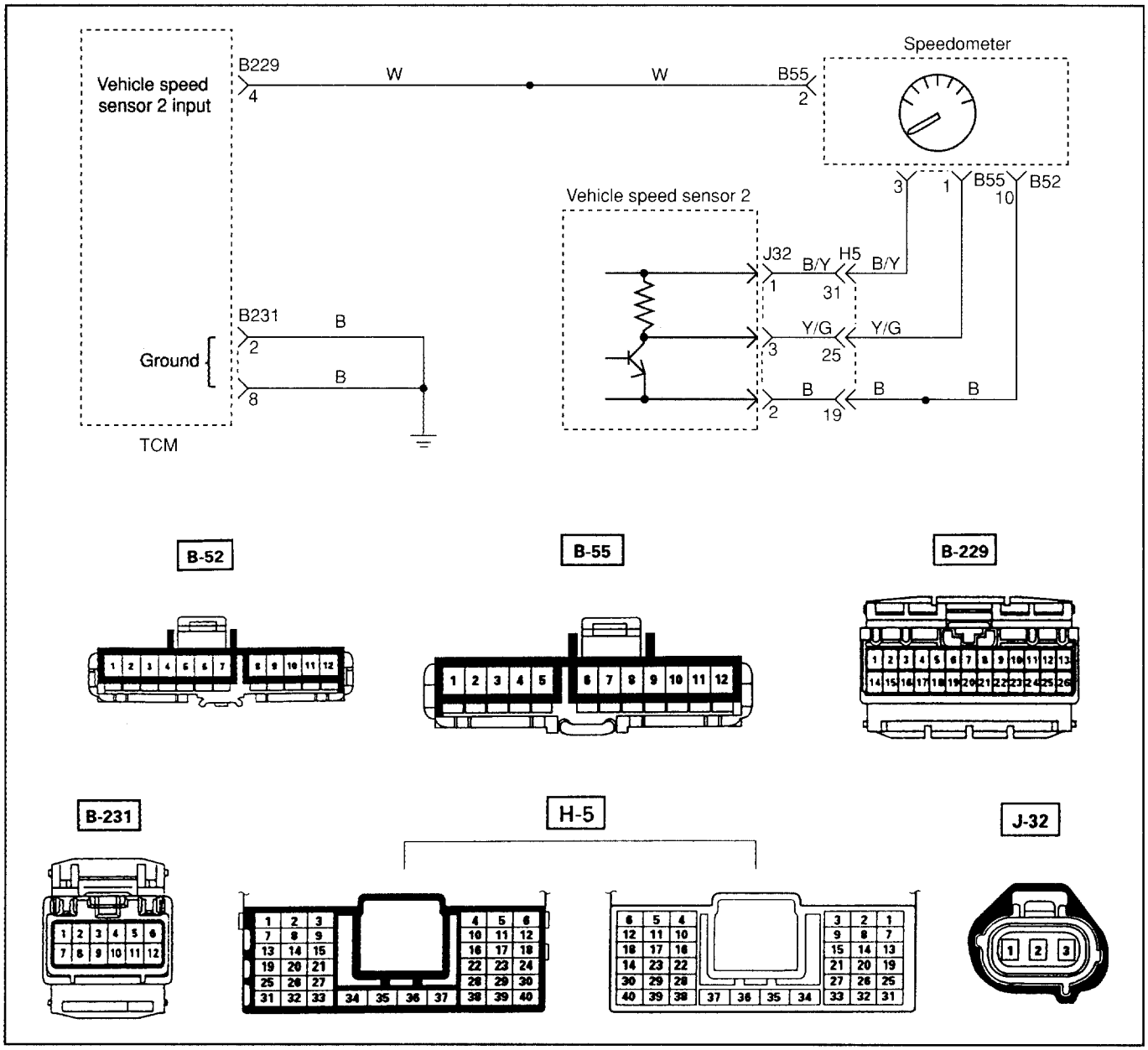

DIAGNOSTIC TROUBLE CODE (DTC) 24
VEHICLE SPEED SENSOR 2
(Wire Breaking/Short Circuit)

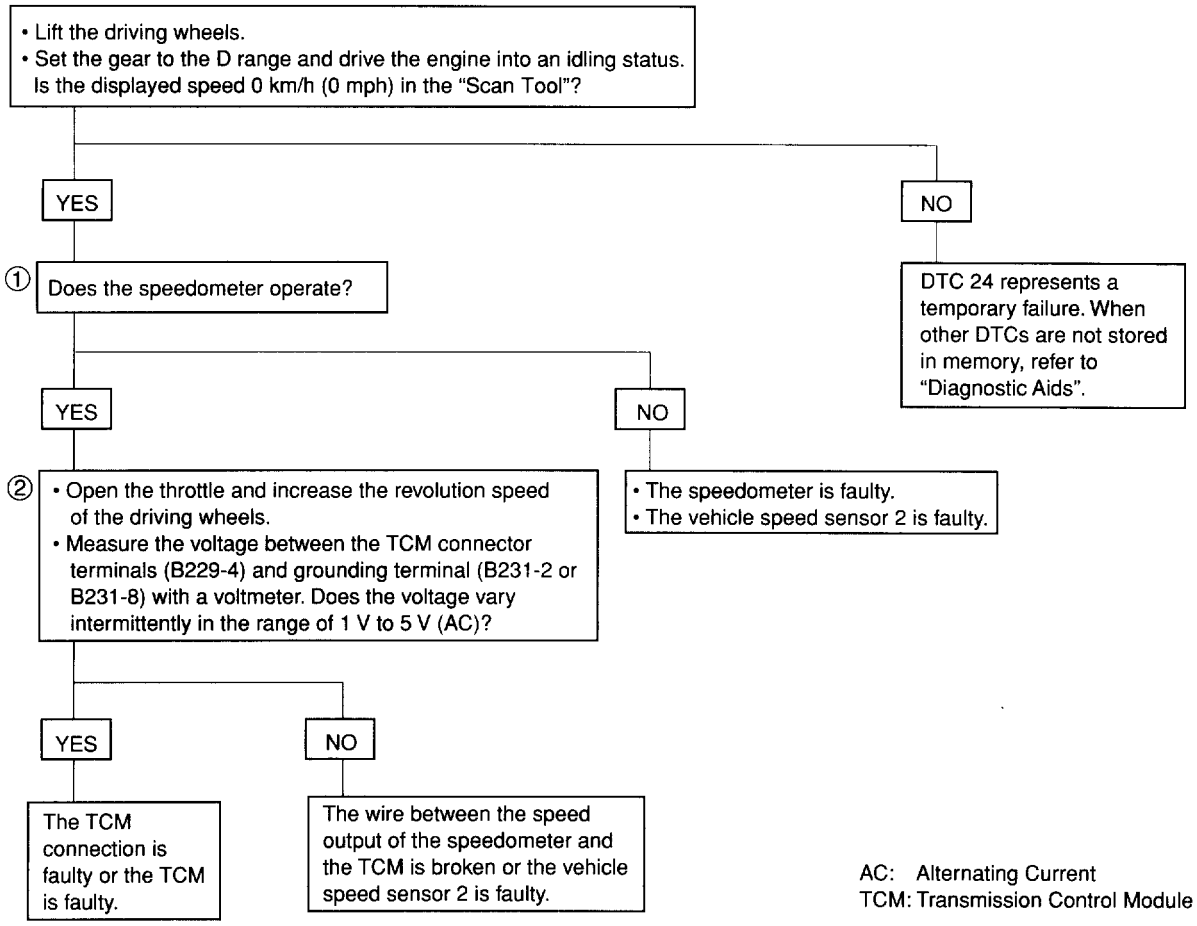

AC: Alternating Current
TCM: Transmission Control Module

DIAGNOSTIC TROUBLE CODE (DTC) 31
No.1 SHIFT SOLENOID (S1)
(Wire Breaking/Short Circuit)

Explanation of Circuit: The No.1 shift solenoid (S1) changes the hydraulic route with the signals from the Transmission Control Module (TCM) according to the vehicle speed and the opening of the throttle in order to exert shift control. When the No.1 or No.2 shift solenoid (S1 or S2) fails, the hydraulic circuit is mechanically operated as a backup.

Explanation of Test: The following numbers correspond to the numbers enclosed with a circle in the diagnosis chart.

① When the key switch has been turned on, the voltage between the TCM terminals (B229-13) and (B231-2 or B231-8) is 10 to 16 V when it is measured with a voltmeter.

② When the driving wheels revolve with the 3rd gear, the voltage is 1 V or less.

③ The solenoid resistance is within the range of 10 to 20 Ω.

Diagnostic Aids: In case of faulty wire connection to the TCM terminal (B229-13), wire breaking or short circuit, DTC 31 is displayed.
A temporary failure may be cause by faulty connection, worn-away wire insulator or internal wire breaking of insulator.

TCM Voltage Check: Refer to page 7A2-57.

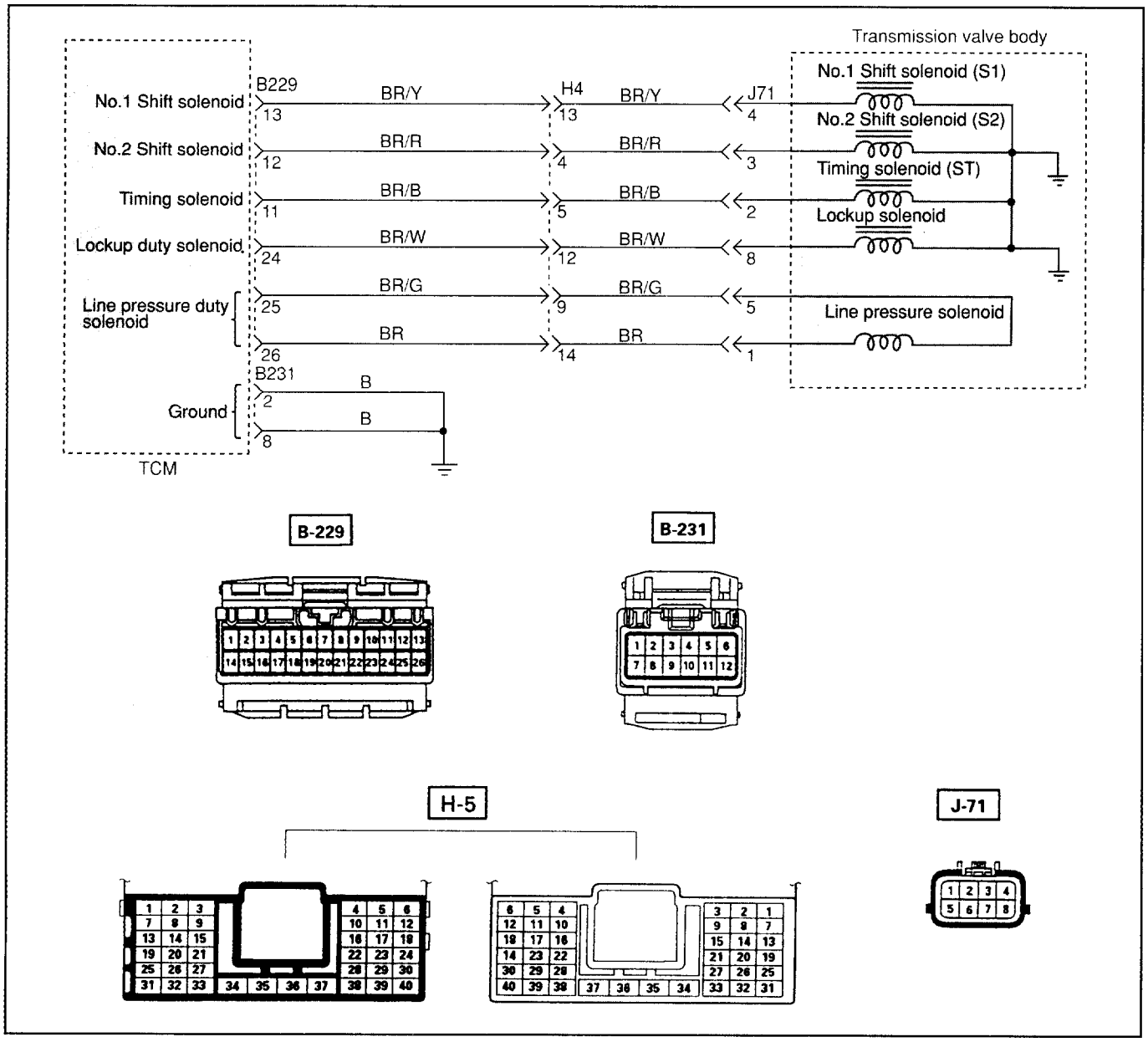

DIAGNOSTIC TROUBLE CODE (DTC) 31
No.1 SHIFT SOLENOID (S1)
(Wire Breaking/Short Circuit)

Operating solenoid

Gear	S1	S2
1st	ON	OFF
2nd	ON	ON
3rd	OFF	ON
4th	OFF	OFF

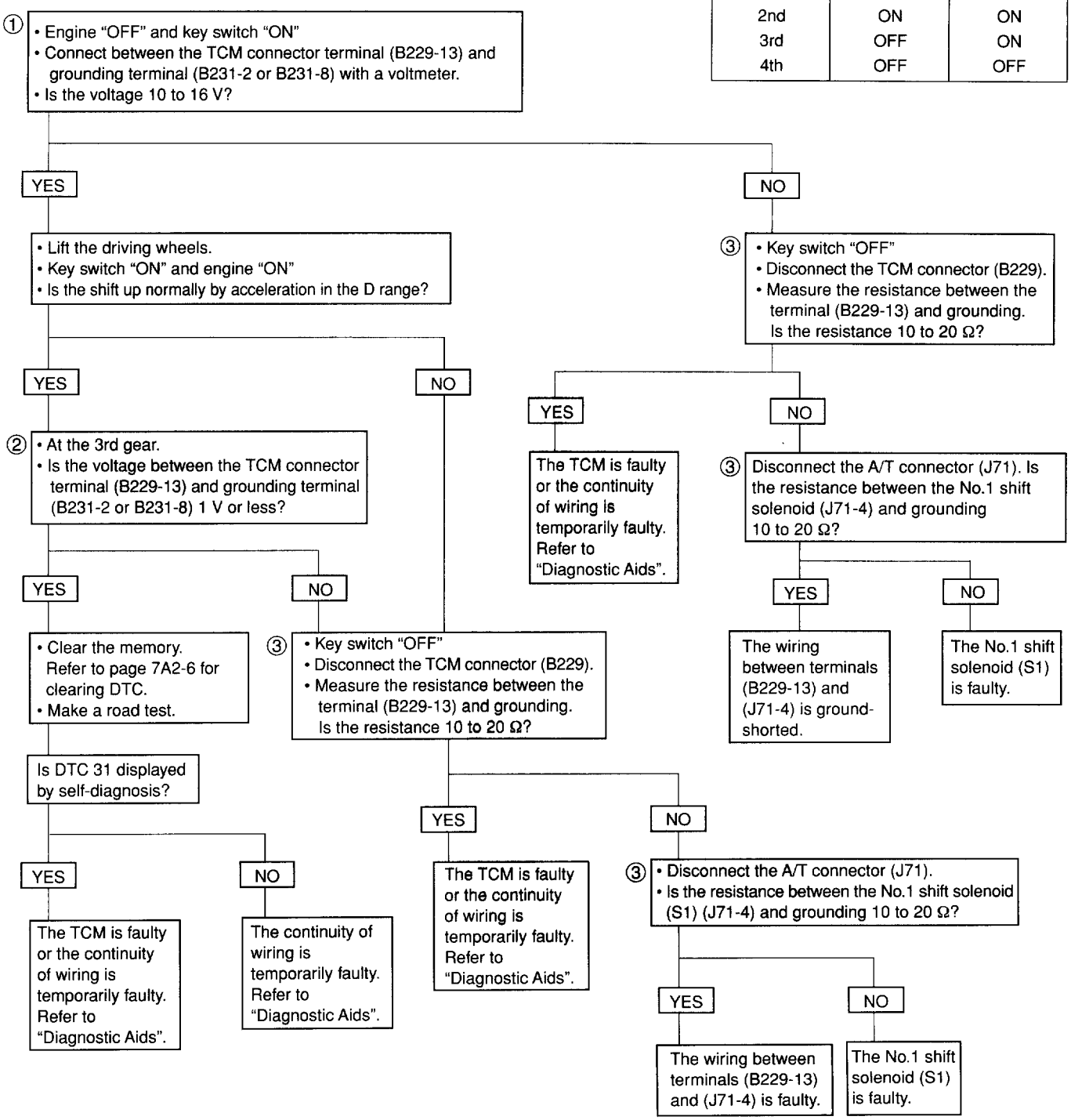

A/T: Automatic Transmission
TCM: Transmission Control Module

DIAGNOSTIC TROUBLE CODE (DTC) 32
No.2 SHIFT SOLENOID (S2)
(Wire Breaking/Short Circuit)

Explanation of Circuit: The No.2 shift solenoid (S2) changes the hydraulic route with the signals from the Transmission Control Module (TCM) according to the vehicle speed and the opening of the throttle in order to exert shift control.
When the No.1 or No.2 shift solenoid (S1 or S2) fails, the hydraulic circuit is mechanically operated as a backup.

Explanation of Test: The following numbers correspond to the numbers enclosed in a circle in the diagnosis chart.

① When the key switch has been turned on, the voltage between the TCM terminals (B229-12) and (B231-2 or B231-8) is 1V or less when it is measured with a voltmeter.
② When the driving wheels revolve with the 2nd gear, the voltage is 1 V or less.
③ The resistance of the solenoid is in the range of 10 to 20 Ω.

Diagnostic Aids: In case of faulty wire connection to the TCM terminal (B229-12), wire breaking or short circuit, DTC 32 is displayed.
A temporary failure may is caused by faulty connection, worn-away wire insulator, or internal wire breaking of insulator.

TCM Voltage Check: Refer to page 7A2-57.

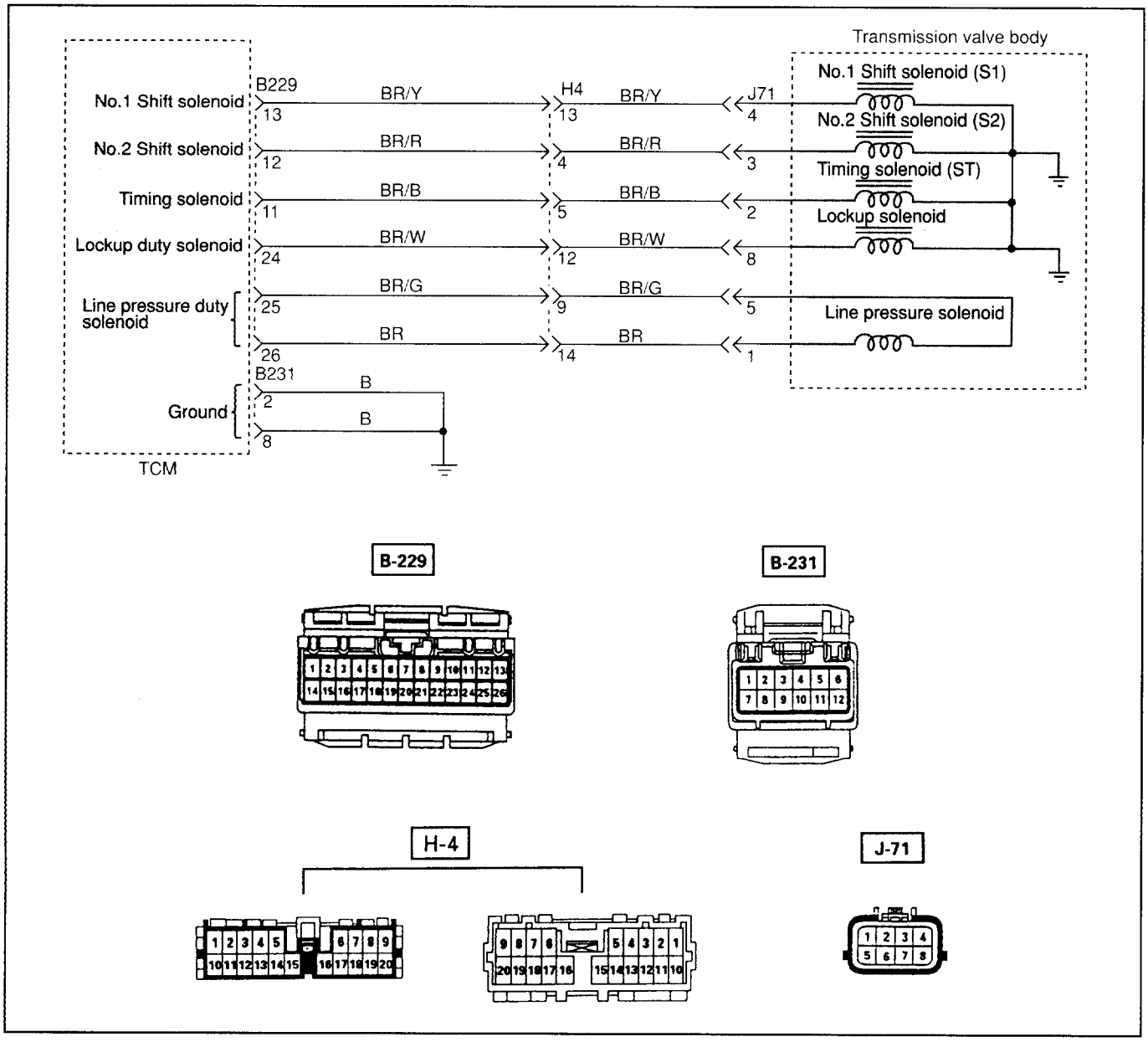

DIAGNOSTIC TROUBLE CODE (DTC) 32
No.2 SHIFT SOLENOID (S2)
(Wire Breaking/Short Circuit)

Operating solenoid

Gear	S1	S2
1st	ON	OFF
2nd	ON	ON
3rd	OFF	ON
4th	OFF	OFF

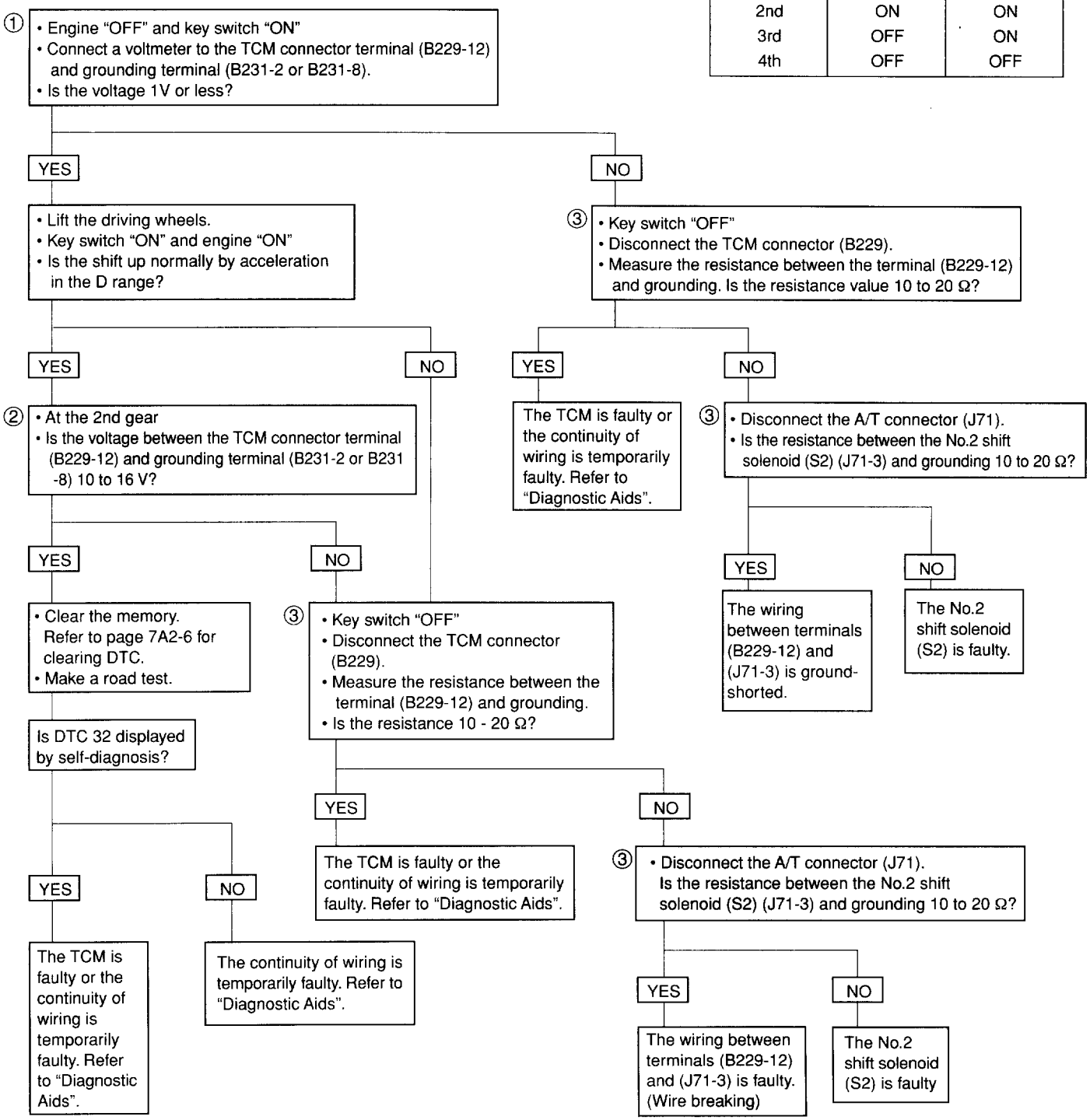

A/T: Automatic Transmission
TCM: Transmission Control Module

DIAGNOSTIC TROUBLE CODE (DTC) 33
TIMING SOLENOID (ST)
(Wire Breaking/Short Circuit)

Explanation of Circuit: When shifting 1st to 2nd, 2nd to 3rd, or 3rd to 2nd, timing solenoid (ST) turns on. It controls the orifice of the 2nd brake (B0) and reduces the shift shock.

Explanation of Test: The following numbers correspond to the numbers enclosed with a circle in the diagnosis chart.

① When the timing solenoid (ST) is ON, the voltage between the TCM terminals (B229-11) and (B48-13 or B48-14) is 10 to 16 V.

② When the timing solenoid (ST) is OFF, the voltage between the TCM terminals (B229-11) and (B231-2 or B231-8) is 1 V or less.

③ The resistance of the timing solenoid is 10 to 20 Ω.

Diagnostic Aids: In case of faulty wire connection to the TCM terminal (B229-11), wire breaking or short circuit, DTC 33 is displayed.
A temporary failure may be caused by faulty connection, worn-away wire insulator or internal wire breaking of insulator.

TCM Voltage Check: Refer to page 7A2-57.

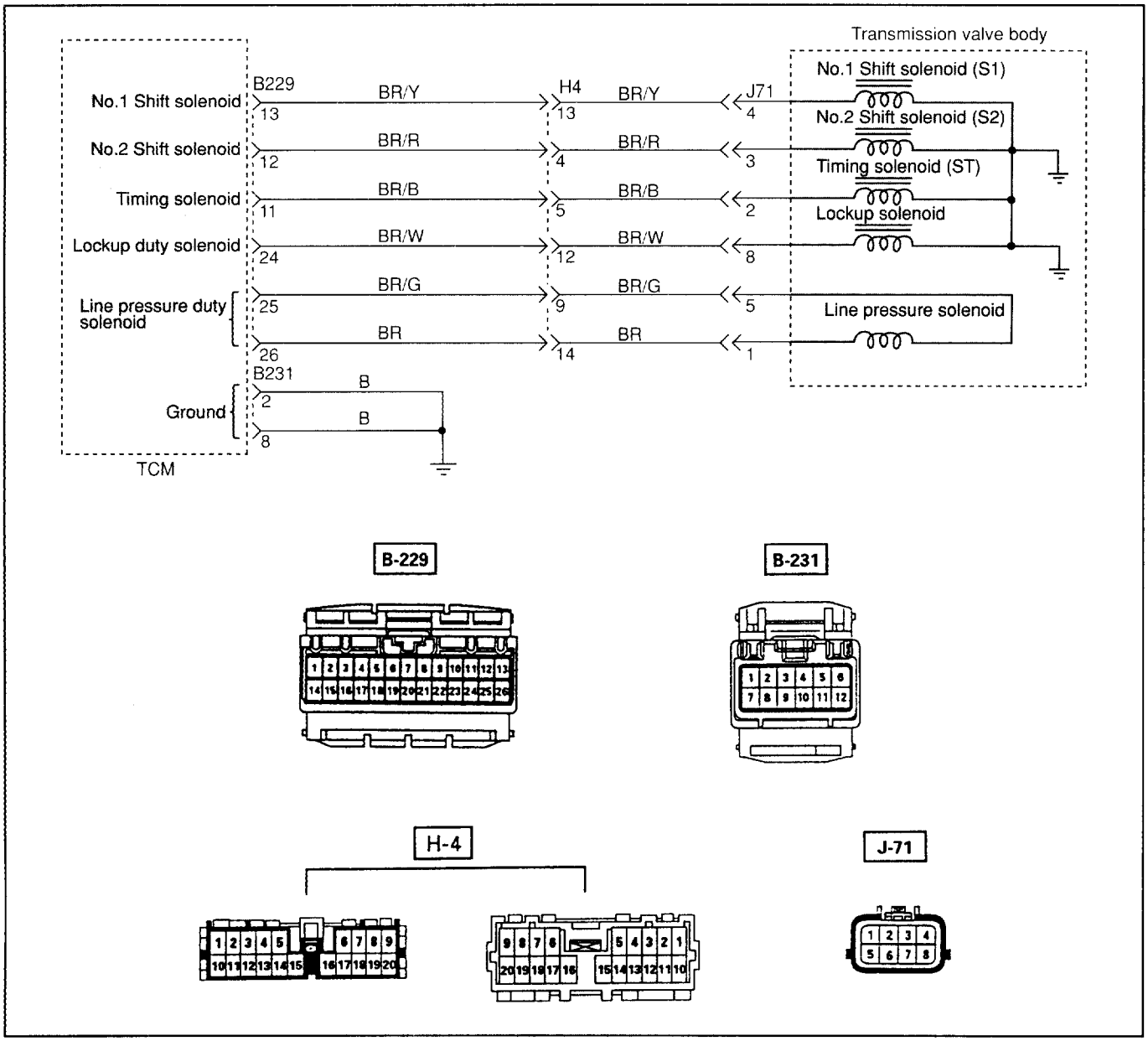

DIAGNOSTIC TROUBLE CODE (DTC) 33
TIMING SOLENOID (ST)
(Wire Breaking/Short Circuit)

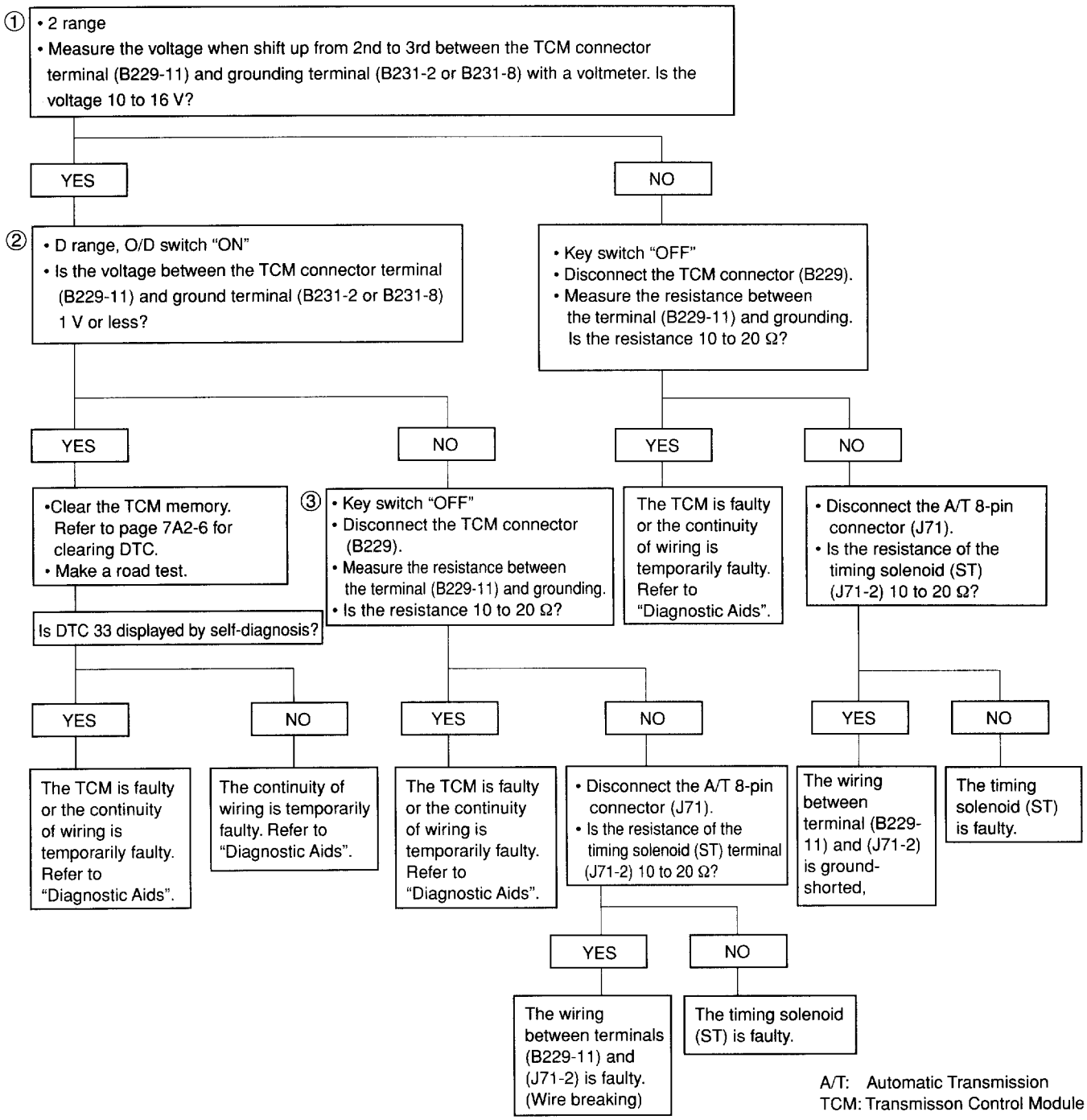

A/T: Automatic Transmission
TCM: Transmisson Control Module

DIAGNOSTIC TROUBLE CODE (DTC) 34
LOCK-UP SOLENOID
(Wire Breaking/Short Circuit)

Explanation of Circuit: The lock-up solenoid of the Torque Converter Clutch (TCC) aims at controlling the lock-up clutch when the vehicle runs.
This function can improve the fuel cost to almost the same extent as the manual transmission. The lock-up solenoid is put into battery voltage by the Transmission Control Module (TCM), so that the solenoid is actuated with the result of lock-up.

Explanation of Test: The following numbers correspond to the numbers enclosed with a circle in the diagnosis chart.

① When the key switch is ON, the voltage between the TCM connector terminals (B229-24) and (B231-2 or B231-8) is 1.0 V or less.

② When the 3rd gear in the D range and the Throttle Position (TP) sensor is about 50% at a higher speed than about 65 km/h (41 mph) at the final gear ratio 5.857, the TCM supplies 10 to 16 V, so that the lock-up duty solenoid is actuated with the result of lock-up.

③ The resistance of the lock-up duty solenoid is 10 to 20 Ω.

Diagnostic Aids: In case of faulty wire connection to the TCM terminal (B229-24), wire breaking or short circuit, DTC 34 is displayed. A temporary failure may be caused by faulty connection, worn-away wire insulator or internal wire breaking of insulator.

TCM Voltage Check: Refer to page 7A2-57.

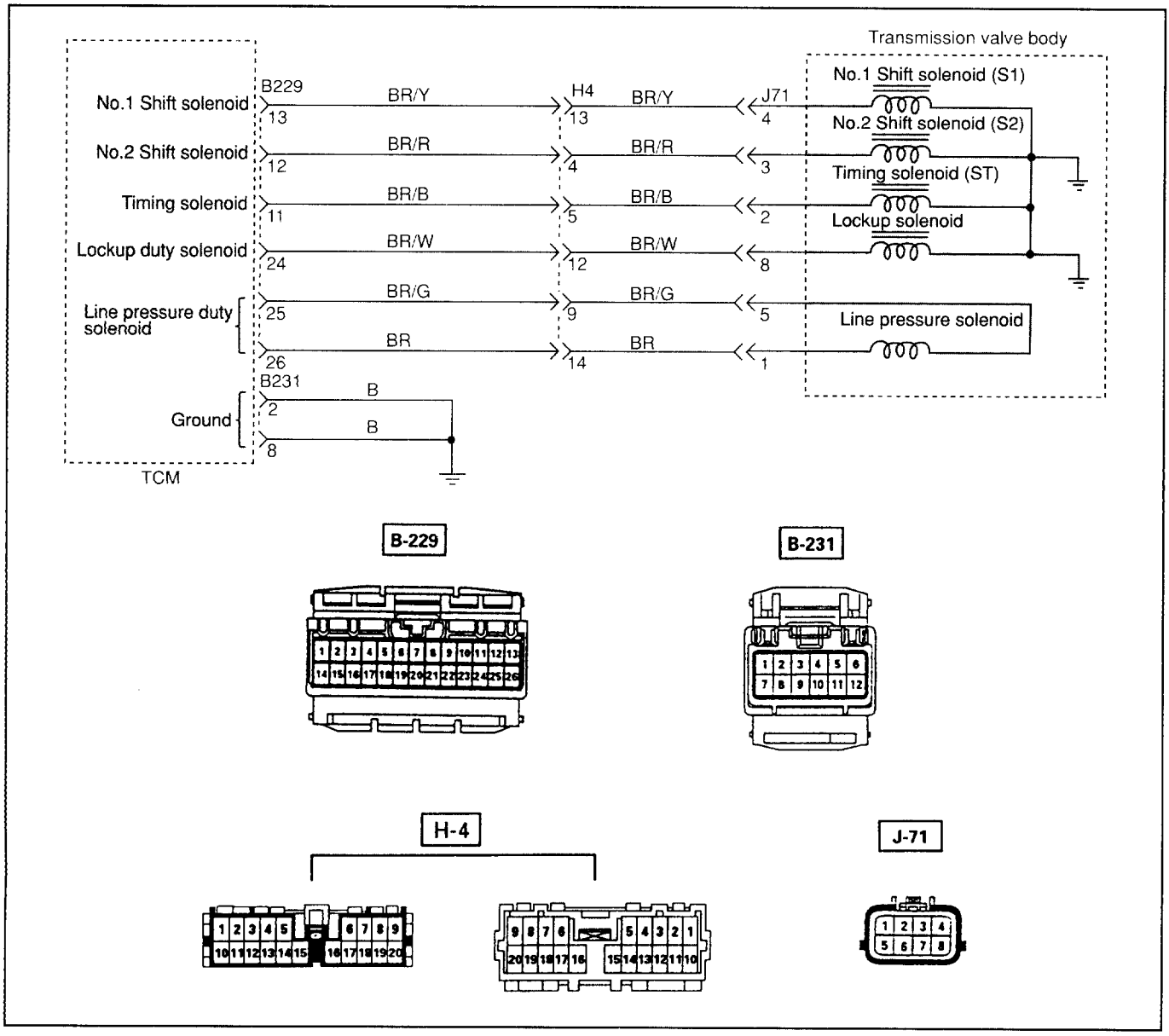

DIAGNOSTIC TROUBLE CODE (DTC) 34
LOCK-UP SOLENOID
(Wire Breaking/Short Circuit)

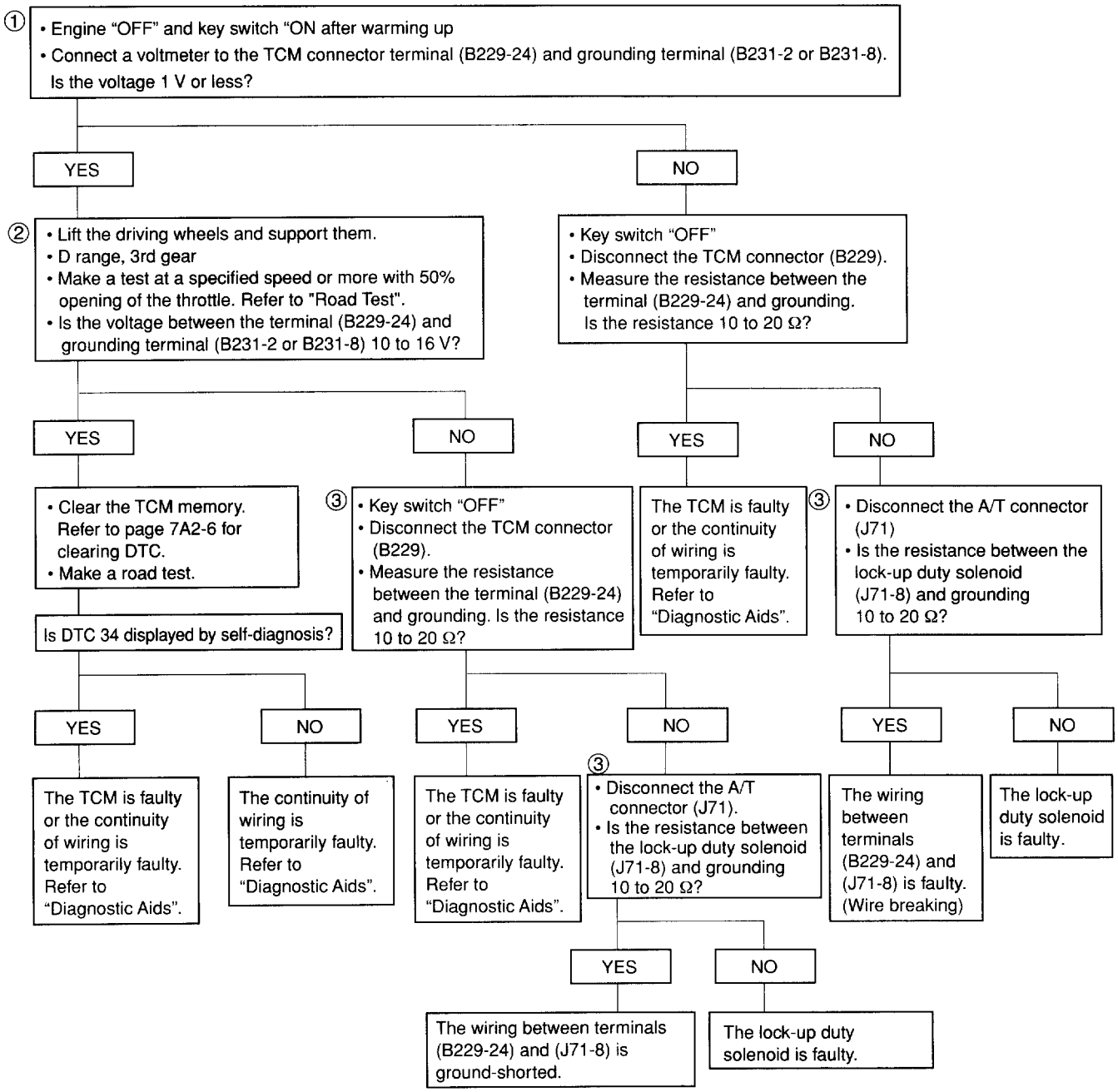

A/T: Automatic Transmission
TCM: Transmission Control Module

DIAGNOSTIC TROUBLE CODE (DTC) 35
LINE PRESSURE SOLENOID
(Wire Breaking/Short Circuit)

Explanation of Circuit: The Transmission Control Module (TCM) outputs signals to the line pressure duty solenoid to control the line pressure of the transmission. With the operation of this solenoid, the operation and shift of the hydraulic circuit in the transmission can be performed smoothly. The line pressure solenoid is controlled according to the inhibitor switch, vehicle speed and throttle position sensor signal.

Explanation of Test: The following numbers correspond to the numbers enclosed with a circle in the diagnosis chart.

① When the key switch is ON, the voltage between TCM terminals (B229-26) and (B229-25) is 3.3 to 5.5 V.

② As the throttle opens gradually, the voltage between TCM terminals (B229-26) and (B229-25) goes down. (When the throttle is completely open, the voltage is 1.0 to 1.7 V)

③ The resistance of the line pressure solenoid is 3.5 to 5.5 Ω.

Diagnostic Aids: In case of faulty wire connection to the TCM terminal (B229-26 or B229-25), wire breaking or short circuit, DTC 35 is displayed.
A temporary failure may be caused by faulty connection, worn-away wire insulator or internal wire breaking of insulator.

TCM Voltage Check: Refer to page 7A2-57.

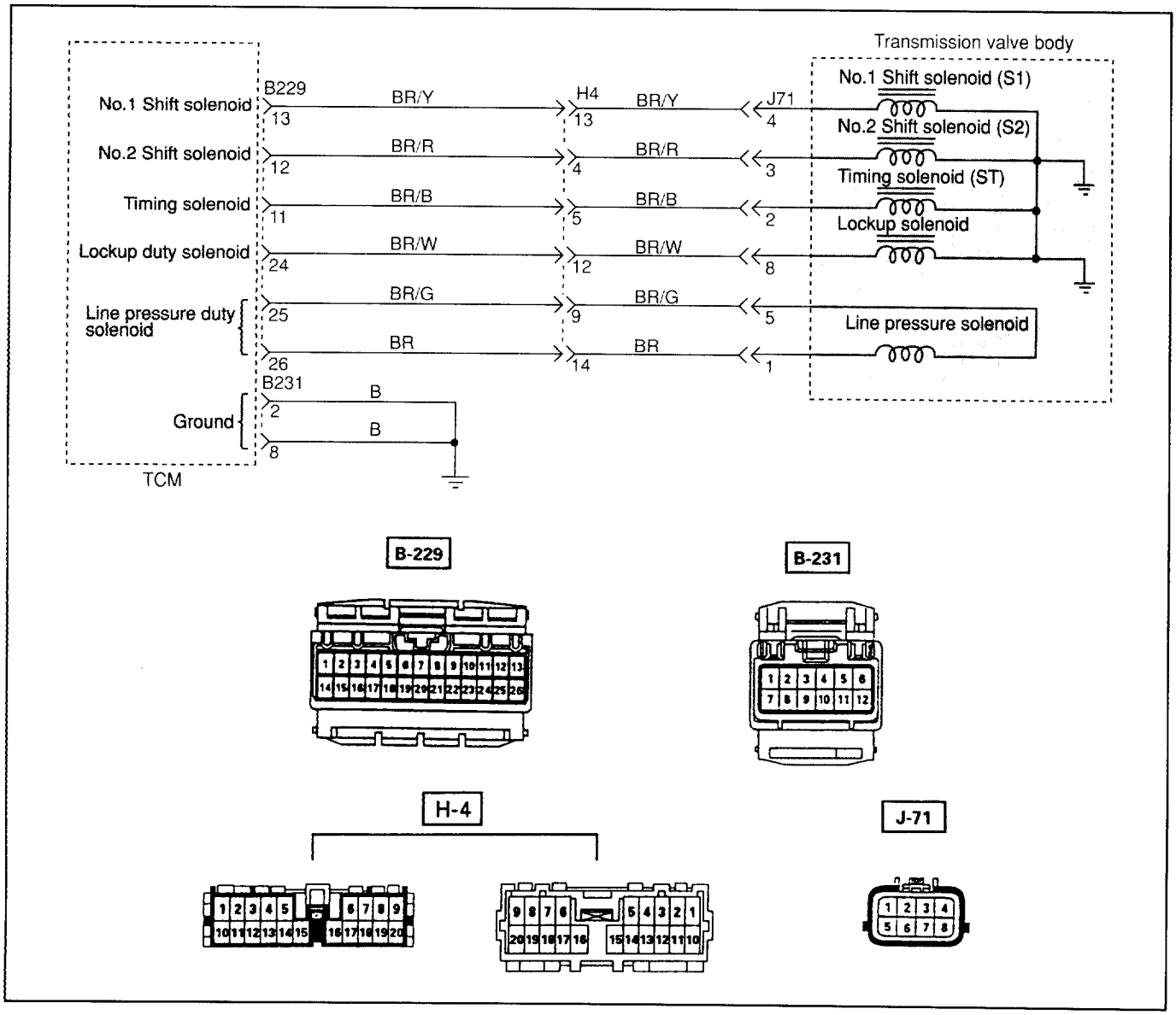

DIAGNOSTIC TROUBLE CODE (DTC) 35
LINE PRESSURE SOLENOID
(Wire Breaking/Short Circuit)

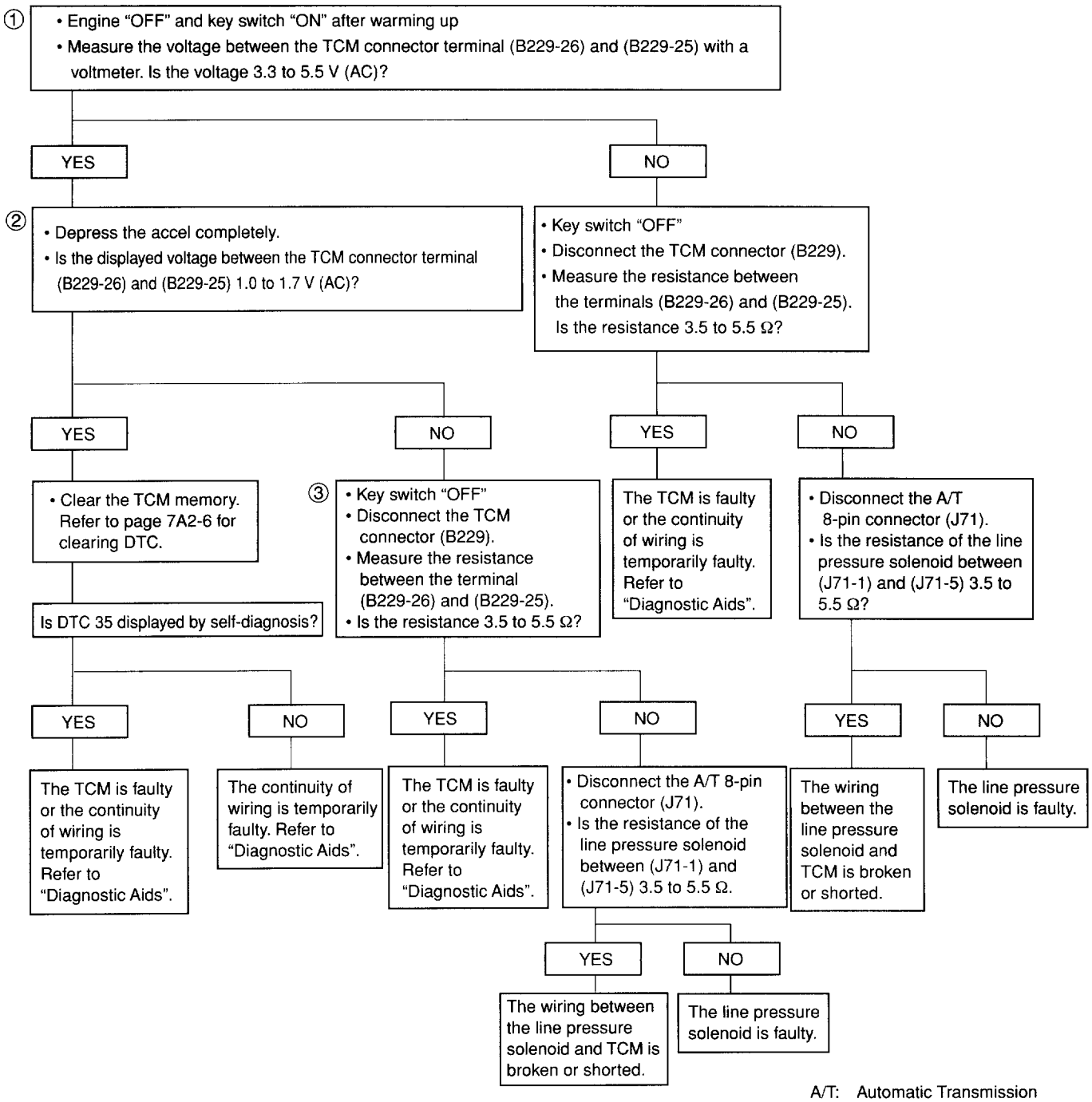

A/T: Automatic Transmission
TCM: Transmission Control Module

DIAGNOSTIC TROUBLE CODE (DTC) 37
EXHAUST BRAKE CUT SYSTEM
(Wire Breaking/Short Circuit)

Explanation of Circuit: The TCM sends the exhaust brake cut signal, the exhaust brake cut relay acts on the exhaust brake magnetic valve to OFF when the selector position is "P", "N" range or when the vehicle speed is slow.
In addition, when the lock-up (ON →OFF) is activate, the TCM sends the exhaust brake cut signal instantaneously.

Explanation of Test: The following numbers correspond to the numbers enclosed with a circle in the diagnosis chart.

① When the exhaust brake cut relay is INACTIVE, the voltage between the TCM terminal (B229-22) and (B231-2 or B231-8) is 10 to 16 V.

② When the exhaust brake cut relay is ACTIVE, the voltage between the TCM terminal (B230-1) and grounding is 1V or less.

Diagnostic Aids: A temporary failure may be caused by faulty connection, worn-away wire insulator or internal wire breaking of insulator.
Check if any of the following conditions is provided in the TCM harness connector: Terminal positional shift, improper junction, lock damage, improper terminal shape or damage, faulty wire connection of terminal, and harness damage.

TCM Voltage Check: Refer to pages 7A2-57.

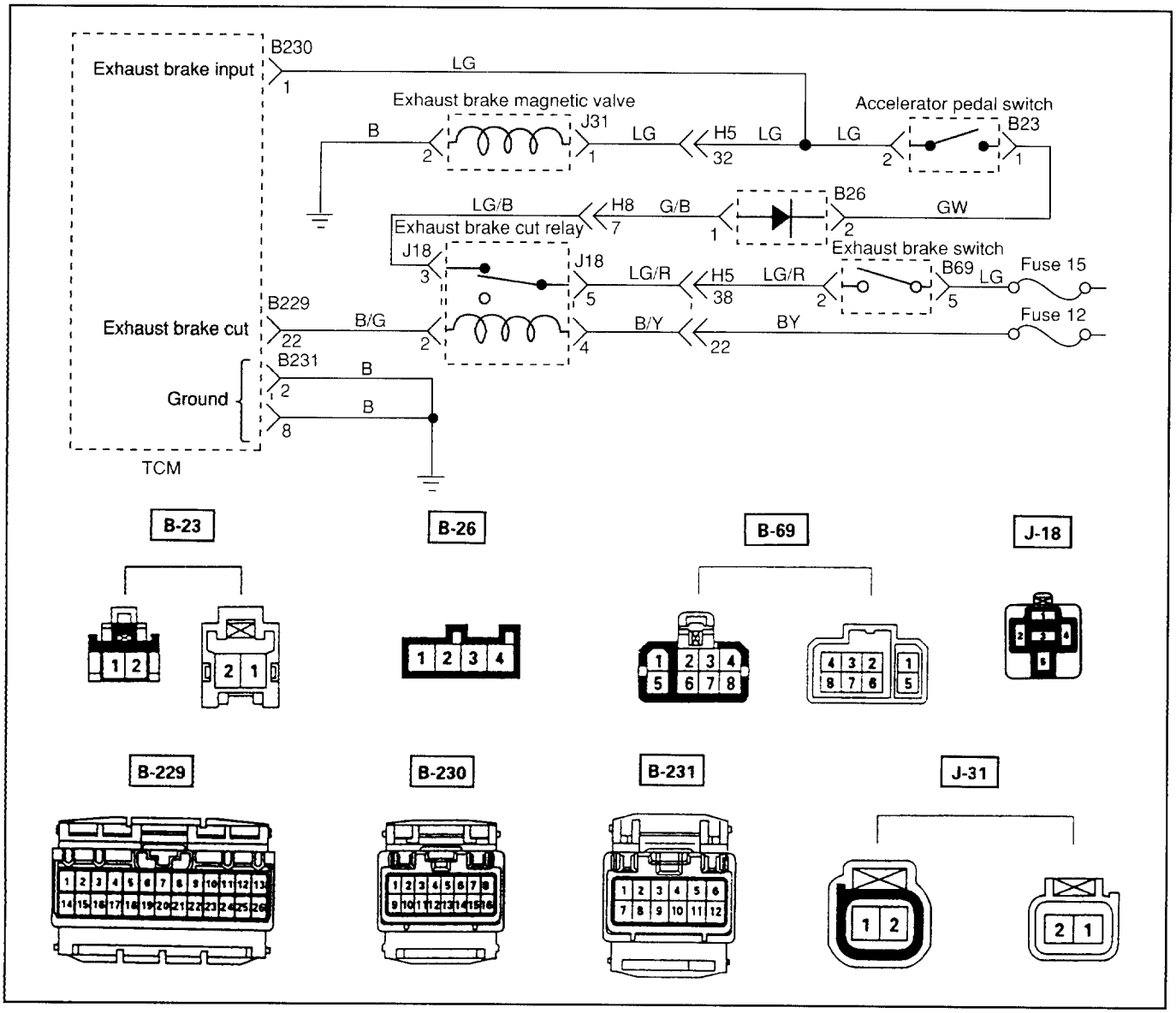

DIAGNOSTIC TROUBLE CODE (DTC) 37 EXHAUST BRAKE CUT SYSTEM (Wire Breaking/Short Circuit)

① • Vehicle is running in "D" range at a speed of 6km/h (10 mph) or more.
• Exhaust brake switch is "ON".
• Measure the voltage between the TCM connector terminal (B229-22) and grounding terminal (B231-2 or B231-8) with a voltmeter. Is the voltage 10 to 16 V?

YES

② • Key switch "OFF"
• Connect a wire between the TCM connector terminal (B229 -22) and (B231-2 or B231-8)
• Shift "P" range. Engine "ON"
• Exhaust brake switch "ON"
• Measure the voltage between the TCM connector terminal (B230-1) and grounding. Is the voltage 1V or less?

YES

The TCM is faulty or the continuity of wiring is temporarily faulty. Refer to "Diagnostic Aids".

NO

• Key switch "OFF"
• Disconnect the exhaust brake cut relay
• Key switch "ON"
• Measure the voltage between the terminal (J18-3) and grounding. Is the voltage 1V or less?

YES

The exhaust brake cut relay is faulty.

NO

The wiring between the terminal (J18-3) and (B230-1) or magnetic valve is shorted to voltaged wire.

NO

• Key switch "OFF"
• Disconnect the exhaust brake cut relay.
• Key switch "ON"
• Measure the voltage between the terminal (J18-4) and grounding. Is the voltage 10 to 16V?

YES

The exhaust brake cut relay is faulty or the continuity of wiring is temporarily faulty. Refer to "Diagnostic Aids".

NO

Wire breaking or a short circuit between the fuse-12 and the terminal (J18-4) or the fuse-12 blow out.

A/T: Automatic Transmission
TCM: Transmission Control Module

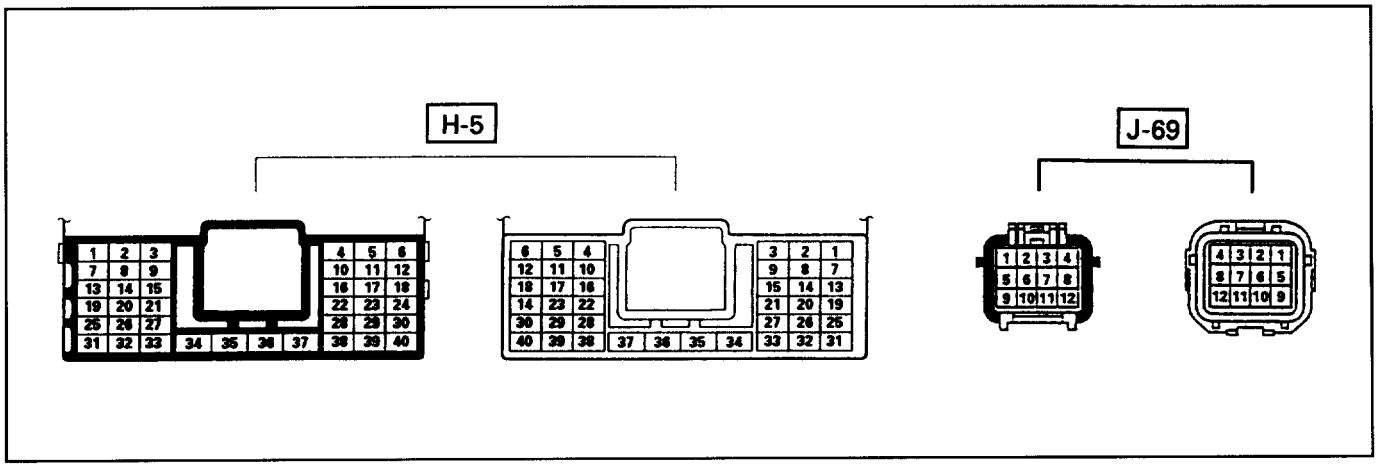

DIAGNOSIS BASED ON VEHICLE CONDITION

ON-VEHICLE SERVICE ITEM

Faulty symptom \ Check position	ATF level and condition	Control linkage	Inhibitor switch	Throttle position sensor	Vehicle speed sensor	Engine speed sensor	Engine idling revolution	Line pressure solenoid	No.1 shift solenoid (S1)	No.2 shift solenoid (S2)	Timing solenoid (ST)	Lock-up solenoid	Starter circuit	O/D OFF switch	Exhaust brake switch	Idle signal	Kick-down switch	TCM	Torque converter
VEHICLE MOVEMENT																			
Vehicle does not run at "R"									1	1								2	
Vehicle does not move at every range	1	1						1											2
Vehicle moves at "P"		1																	
Parking gear does not release when selector is moved from "P"		1																	
Vehicle moves at "N"		1																	
ABNORMAL GEAR CHANGE																			
Does not upshift from 1st to 2nd		1	1		3					2								3	
Does not upshift from 2nd to 3rd		1	1		3				2									3	
Does not upshift from 3rd to 4th			1		3					2				3				3	
Does not downshift from 4th to 3rd					2					1								2	
Does not downshift from 3rd to 2nd					2				1									2	
Does not downshift from 2nd to 1st					2					1								2	
Engine overruns when shifting from 2nd to 3rd				1		3					2							3	
All shift points extremly high or low				1	2													2	
Kick-down fails				1	3				2	2								3	
Engine brake does not function at "L" range										1								2	
Engine brake does not function at "2" range									1	1								2	
Lock-up device does not function				1		3		1	2	2		2			3	3		3	4
Lock-up point extremly high or low				1	3							2						3	
EXCESSIVE SHOCK WHEN CHANGING GEARS																			
Excessive shock when selector is moved to "R" from "N", or "D" from "N"				1			2	1			2					2	2		
Excessive shock when upshifting from 1st to 2nd				1							2					3	3	3	
Excessive shock when upshifting from 2nd to 3rd				1		3										3	3	3	
Excessive shock when upshifting from 3rd to 4th				1												2	2		
Excessive shock when upshifting (all gear)				1												2	2		
Excessive shock when downshift from 4th to 3rd				1												2	2		
Excessive shock when downshift from 3rd to 2nd				1							2					3	3	3	
When lock-up				1	2														3
SLIPPAGE																			
When going forward and backward	1			1				1											2
When in reverse gear				1															
When in 1st gear				1															
When in 2nd gear				1															
When in 3nd gear				1															
When in 4th gear				1															
OTHERS																			
Engine will not srart in either "P" or "N"		1	1										2						
Engine can start in other than "P" or "N"		1	1																
Engine stalls when selector is moved from "P" or "N" to one of drive ranges							2					1							3
Automatic transmission unit overheating/ATF blows off from air breather pipe	1							1				3						3	4

Note: The numbers in the table denote the order of inspection.

1. Moveable parts that are dislocated easily or are hard to adjust.
2. Parts that are turned on and off.
3. Other parts that are controlled by electrical circuit.
4. Others.

OVERHAUL ITEM

Faulty symptom \ Check position	ATF thermosensor	Oil pump	O/D brake (B0)	2nd brake (B1)	1st & Rev. brake (B2)	O/D direct clutch (C0)	Front Clutch (C1)	Rear clutch (C2)	O/D one-way clutch (F0)	No. 2 one-way clutch (F1)	Front planetary	Rear planetary	Parking linkage	Valve body assembly	B0 accumulator	C1 accumulator	B1 accumulator	C2 accumulator	Line pressure solenoid
VEHICLE MOVEMENT																			
Vehicle does not run at "D", "2", "L"							○												
Vehicle does not run at "R"					○			○											
Vehicle does not move at every range		○				○			○		○	○		○					
Vehicle moves at "P"													○						
Parking gear does not release when selector is moved from "P"													○						
Vehicle moves at "N"							○	○											
ABNORMAL GEAR CHANGE																			
Does not upshift from 1st to 2nd				○						○				○					
Does not upshift from 2nd to 3rd						○		○						○					
Does not upshift from 3rd to 4th	○		○											○					
Does not downshift from 4th to 3rd						○			○					○					
Does not downshift from 3rd to 2nd				○										○					
Does not downshift from 2nd to 1st						○				○				○					
Engine overruns when shifting from 2nd to 3rd								○						○					
All shift points extremly high or low																			
Kick-down fails														○					
Engine brake does not function at "L" range					○									○					
Engine brake does not function at "2" range						○													
Lock-up device does not function	○													○					○
Lock-up point extremly high or low														○					
EXCESSIVE SHOCK WHEN CHANGING GEARS																			
Excessive shock when selector is moved to "R" from "N"					○			○						○				○	
Excessive shock when selector is moved to "D" from "N"							○			○				○		○			
Excessive shock when selector is moved to "R" from "N", or "D" from "N"														○					○
Excessive shock when upshifting from 1st to 2nd				○										○			○		○
Excessive shock when upshifting from 2nd to 3rd						○		○						○				○	○
Excessive shock when upshifting from 3rd to 4th			○											○	○				○
Excessive shock when upshifting (all gear)	○						○							○					○
Excessive shock when downshift from 4th to 3rd						○			○					○					○
Excessive shock when downshift from 3rd to 2nd				○										○			○		○
When lock-up														○					○
SLIPPAGE																			
When going forward and backward		○							○										○
When in reverse gear					○			○											○
When in 1st gear							○			○									○
When in 2nd gear				○			○		○										○
When in 3nd gear							○	○											○
When in 4th gear			○				○	○											○
OTHERS																			
Engine will not srart in either "P" or "N"																			
Engine can start in other than "P" or "N"																			
Engine stalls when selector is moved from "P" or "N" to one of drive ranges														○					
Automatic transmission unit overheating/ATF blows off from air breather pipe		○	○	○			○	○						○					

INSPECTION BASED ON FAULTY SYMPTOM

This section details how to inspect or repair the following phenomena found in fault reproducing tests:

1. The vehicle does not move at every range.
2. The vehicle moves at the "N" range.
3. The gear cannot be changed.
4. Does not upshift from the 3rd to 4th.
5. The gear change is abnormal.
6. At acceleration, the engine races and slippage occurs.
7. The engine stalls when the selector lever is moved from the "P" or "N" to one of the drive ranges.
8. The ATF blows off from the air breather pipe during driving.
9. Engine brake does not function.

1	**The vehicle does not move at every range.**		
Situations	When the accelerator is depressed while the selector lever is set in the drive range, the vehicle does not move, but the engine comes to rotate faster.		
Causes	① The ATF is not sufficient. ② The selector lever has not been assembled nor adjusted correctly. ③ The throttle position sensor is defective or is not adjusted correctly. ④ The line pressure has dropped. ⑤ The powertrain slippage. ⑥ The control valve does not slide correctly. ⑦ The line pressure solenoid is defective. ⑧ The parking mechanism is defective.		
Steps	**Inspection**		**Corrective Measures**
1–1	Is the ATF sufficient and in good order? (See Page 7A3-2) <Reference> • When the ATF is cloudy (pinkish), it contains some water.	YES	Proceed to the next step.
		NO	<Reference> • It is finally required to replace the transmission. The inside of the transmission is considered to be damaged, and the causes will be traced in the following step. If the ATF has become cloudy, replace the A/T and check the route (radiator, etc.) through which water has entered the A/T.
1–2	Is the self-diagnosis satisfactory? (See Page 7A2-3)	YES	Proceed to the next step.
		NO	When a DTC is shown, check the relevant section of the DTC. When the trouble cannot be fixed, replace the transmission.
1–3	Is the line pressure sufficient? (See Page 7A2-62) kPa (kg/cm²/PSI) Range: D — Idling pressure: 529-784 (5.4-8.0/77-114) — Stall pressure: 990-1480 (10.1-15.1/144-215) Range: R — Idling pressure: 755-1127 (7.7-11.5/110-164) — Stall pressure: 1401-2107 (14.3-21.5/203-306)	YES	Proceed to the next step.
		NO	Proceed to the Step 1–5.
1–4	Is the parking mechanism in good order? • The tires are locked when the selector lever is set in the "P" range. • When the brake is released with the selector lever set in other range than "P", the vehicle can be moved by being pushed.	YES	The powertrain inside the A/T is considered to be out of order. Replace the transmission.
		NO	The parking mechanism is considered to be out of order. Replace the transmission.
1–5	Does the selector lever move well?	YES	Proceed to the next step.
		NO	Adjust the selector lever.

A/T: Automatic Transmission ATF: Automatic Transmission Fluid DTC: Diagnostic Trouble Code

<table>
<tr><th>Steps</th><th>Inspection</th><th></th><th>Corrective Measures</th></tr>
<tr><td rowspan="2">1–6</td><td rowspan="2">Does the line pressure solenoid of the TCM output correct voltage? (See Page 7A2-58)
<table><tr><th>Terminals</th><th>Voltage (V)</th><th>Measuring Conditions</th></tr><tr><td rowspan="2">B229-26</td><td>3.3–5.5</td><td>When the throttle is completely closed.</td></tr><tr><td>1.0–1.7</td><td>When the throttle is fully open.</td></tr></table></td><td>YES</td><td>Replace the transmission.</td></tr>
<tr><td>NO</td><td>Measure the resistance values.
(See Page 7A3-14)
OK → Proceed to the next step.
NG → Check defective parts or the harness.</td></tr>
<tr><td rowspan="2">1–7</td><td rowspan="2">Are signals properly input to the throttle position sensor of the TCM? (See Page 7A2-58)
<table><tr><th>Terminals</th><th>Voltage (V)</th><th>Measuring Conditions</th></tr><tr><td rowspan="2">⊕ B229-5
↕
⊖ B229-19</td><td>4.1–4.5</td><td>Release the accelerator (to close the throttle completely).</td></tr><tr><td>0.8–1.6</td><td>Depress the accelerator fully (to open the throttle fully).</td></tr></table></td><td>YES</td><td>Replace the TCM.
Check the ATF, and when a sign of “Burn” or “Damage” is found inside the A/T, replace the A/T as well.</td></tr>
<tr><td>NO</td><td>Proceed to the next step.</td></tr>
<tr><td rowspan="2">1–8</td><td rowspan="2">Is the supply voltage of the throttle position sensor satisfactory? (See Page 7A2-59)
<table><tr><th>Terminals</th><th>Voltage (V)</th></tr><tr><td>⊕ ⊖
B229-18 ↔ B229-19</td><td>4.5–5.5</td></tr></table></td><td>YES</td><td>Check the throttle position sensor and the harness.
As the inside of the A/T is considered to be damaged, replace the transmission.</td></tr>
<tr><td>NO</td><td>Check the power circuit of the throttle position sensor.
When it is in order, replace the TCM.</td></tr>
</table>

A/T: Automatic Transmission ATF: Automatic Transmission Fluid TCM: Transmission Control Module

2	**The vehicle moves at the "N" range.**		
Situations	• The vehicle moves at the time of idling and accelerates when the accelerator is depressed with the selector lever set in the "N" range. • The vehicle does not drive with the selector lever set in the "R" range.		
Causes	① The selector lever has not been assembled nor adjusted correctly. ② The front clutch or the rear clutch has seized. ③ The manual valve has malfunctioned (the linkage has come off).		
Steps	**Inspection**		**Corrective Measures**
2–1	Does the selector lever work well?	YES	Proceed to the next step.
		NO	Adjust the selector lever, then proceed to the next step.
2–2	Can the trouble be fixed by conducting a road test? Do you recognize no abnormal phenomenon like "Slippage"?	YES	Proceed to the next step.
		NO	The inside of the A/T is considered to be damaged, so replace the A/T.
2–3	Is the stall revolution normal in a stall test? Stall revolution: 1600–1900 RPM	YES	The control linkage is defective, but the inside of the A/T is considered to be free of any fault.
		NO	Replace the A/T.

A/T: Automatic Transmission

3	**The gear cannot be changed.**
Situations	• Gear changes from 1st to 2nd, from 2nd to 3rd and from 3rd to 4th are not possible, and the shift gear is fixed. • The gear changes at a time but not at other time.
Causes	① The shift solenoids (No.1 and 2) are defective. ② The control valve does not slide properly. ③ The vehicle speed sensor 1 is defective. ④ Grounding is not correct. ⑤ The TCM is defective.

Steps	Inspection		Corrective Measures
3–1	Is the self-diagnosis satisfactory? (See Page 7A2-3)	YES	Proceed to the next step.
		NO	A DTC appears Check the relevant DTC section.
3–2	Is the gear set to the 1st when the vehicle starts?	YES	Proceed to the Step 3–4.
		NO	Proceed to the next step.
3–3	Are the output voltages from the TCM to the No.1 and 2 shift solenoids (S1 and S2) satisfactory in the "4th (O/D)" range? (See Page 7A2-58 and 59)	YES	Proceed to the next step.
		NO	Measure the resistances of the shift solenoids No.1 and 2. (See Page 7A3-14) OK → Proceed to the Step 3–7. NG → Check the shift solenoids No.1, 2 and the harness.
3–4	Is the resistance of the vehicle speed sensor 1 satisfactory?	YES	Check wiring from the TCM to the vehicle speed sensor 1 and connection of the connector. Proceed next step.
		NO	Replace the vehicle speed sensor 1. Proceed to the next step.
3–5	Is the trouble is fixed when the TCM is replaced with a non-defective one?	YES	Replace the TCM.
		NO	Replace the A/T.

Solenoid	Terminal	Voltage (V)
No.1 (S1)	B229-13	12 : When driving at the D1 or D2 gear. 0 : When driving at the D3 or D4 gear.
No.2 (S2)	B229-12	12 : When driving at the D2 or D3 gear. 0 : When driving at the D1 or D4 gear.

Resistance (Ω)	560–680 (at 20°C)

A/T: Automatic Transmission ATF: Automatic Transmission Fluid DTC: Diagnostic Trouble Code O/D: Overdrive
TCM: Transmission Control Module

4	**Does not upshift from the 3rd to 4th.**		
Situations	• Even though the engine is accelerated and rotates faster, the gear does not shift to the 4th. • When the accelerator is released at the vehicle speed is over 60km/h (38mph) with the selector lever set in the "D" range, the gear is not set to 4th. ※ When the engine is cold (the ATF temperature is below 40°C/104°F), the gear is not set to the 4th (O/D).		
Causes	① The ATF thermosensor is defective. ② The No.1 and 2 shift solenoids are defective. ③ The control valve does not slide well. ④ The inhibitor switch is defective or is not adjusted correctly. ⑤ The vehicle speed sensor 1 is defective. ⑥ The O/D OFF switch is defective. ⑦ The grounding is not correct. ⑧ The TCM is defective.		
Steps	**Inspection**		**Corrective Measures**
4–1	Is the self-diagnosis satisfactory? (See Page 7A2-3)	YES	Proceed to the next step.
		NO	A DTC appears. Check the relevant DTC section.
4–2	Are the output voltages from the TCM to the No.1 and 2 shift solenoids (S1 and S2) satisfactory in the "4th (O/D)" range? (See Page 7A2-58 and 59)	YES	The inside of the A/T is considered to be defective. Check the ATF, and if internal parts have been burnt, replace the A/T.
		NO	Measure the resistances of the shift solenoids No.1 and 2. OK → Proceed to the next step. NG → Check defective parts and the harness.

Solenoid	Terminal	Voltage (V)
No.1 (S1)	B229-13	12 : When driving at the D1 or D2 gear. 0 : When driving at the D3 or D4 gear.
No.2 (S2)	B229-12	12 : When driving at the D2 or D3 gear. 0 : When driving at the D1 or D4 gear.

A/T: Automatic Transmission ATF: Automatic Transmission Fluid DTC: Diagnostic Trouble Code O/D: Overdrive
TCM: Transmission Control Module

<table>
<tr><th>Steps</th><th>Inspection</th><th></th><th>Corrective Measures</th></tr>
<tr><td rowspan="2">4–3</td><td rowspan="2">Are the voltages at the inhibitor switch and O/D OFF switch terminal of the TCM satisfactory?
(See Pages 7A2-60 and 61)
<table><tr><th>Terminal</th><th>Voltages (V)</th><th>Measuring Conditions</th></tr><tr><td rowspan="2">B231-3</td><td>10–16</td><td>“P” range</td></tr><tr><td>1 max.</td><td>Other than “P” range</td></tr><tr><td rowspan="2">B231-9</td><td>10–16</td><td>“R” range</td></tr><tr><td>1 max.</td><td>Other than “R” range</td></tr><tr><td rowspan="2">B231-4</td><td>10-16</td><td>“N” range</td></tr><tr><td>1 max.</td><td>Other than “N” range</td></tr><tr><td rowspan="2">B231-10</td><td>10–16</td><td>“D” range</td></tr><tr><td>1 max.</td><td>Other than “D” range</td></tr><tr><td rowspan="2">B231-11</td><td>10–16</td><td>“2” range</td></tr><tr><td>1 max.</td><td>Other than “2” range</td></tr><tr><td rowspan="2">B231-6</td><td>10–16</td><td>“1” range</td></tr><tr><td>1 max.</td><td>Other than “1” range</td></tr><tr><td rowspan="2">B230-6</td><td>10–16</td><td>O/D OFF switch “OFF”</td></tr><tr><td>1 max.</td><td>O/D OFF switch “ON”</td></tr></table></td><td>YES</td><td>Proceed to the next step.</td></tr>
<tr><td>NO</td><td>Check defective parts and the harness.
When the trouble is not fixed, return to the Step 4–2.</td></tr>
<tr><td rowspan="2">4–4</td><td rowspan="2">Is the resistance of the vehicle speed sensor 1 satisfactory?
<table><tr><td>Resistance (Ω)</td><td>560–680 (at 20°C)</td></tr></table></td><td>YES</td><td>Check wiring from the TCM to the vehicle speed sensor 1 and connection of the connector.
Proceed next step.</td></tr>
<tr><td>NO</td><td>Replace the vehicle speed sensor 1.
Proceed next step.</td></tr>
<tr><td rowspan="2">4–5</td><td rowspan="2">Is the potential difference between the ground terminal B231-2 or B231-8 of the TCM and the transmission case correct?
<table><tr><td>Potential difference</td><td>0V (when it is normal)</td></tr></table></td><td>YES</td><td>Replace the TCM.</td></tr>
<tr><td>NO</td><td>The grounding is considered not to be correct.
Check the grounding point.</td></tr>
</table>

O/D: Overdrive TCM: Transmission Control Module

5	**The gear change is abnormal.**		
Situations	• The gear change pattern is different from the drive pattern. Example) When the engine is accelerated by depress on the accelerator slowly, the 1st gear abruptly changes to the 4th gear.		
Causes	① The ATF is not sufficient. ② The grounding is not correct. ③ The throttle position sensor is defective or has not been adjusted correctly. ④ The vehicle speed sensor 1 is defective. ⑤ The TCM is defective. ⑥ The control valve does not slide well.		
Steps	**Inspection**		**Corrective Measures**
5–1	Is the ATF sufficient and in good order? (See Page 7A3-2) <Reference> • When the ATF is cloudy (pinkish), it contains water.	YES	Proceed to the next step.
		NO	<Reference> • It is finally required to disassemble and repair the A/T. The inside of the A/T is considered to be damaged. Proceed to the next step, and find causes of the trouble. When the ATF is cloudy, replace the A/T and check the route (radiator, etc.) through which water has entered the A/T.
5–2	Is the self-diagnosis satisfactory? (See Page 7A2-3)	YES	Proceed to the next step.
		NO	A DTC appears. Check the relevant DTC section.
5–3	Is the line pressure sufficient? (See Page 7A2-62) kPa (kg/cm²/PSI)	YES	Replace the A/T.
		NO	Proceed to the next step.
5–4	Does the selector lever work well?	YES	Proceed to the next step.
		NO	Adjust the selector lever.

Range	Idling pressure	Stall pressure
D	529-784 (5.4-8.0/77-114)	990-1480 (10.1-15.1/144-215)
R	755-1127 (7.7-11.5/110-164)	1401-2107 (14.3-21.5/203-306)

A/T: Automatic Transmission ATF: Automatic Transmission Fluid DTC: Diagnostic Trouble Code
TCM: Transmission Control Module

<table>
<tr><th>Steps</th><th>Inspection</th><th></th><th>Corrective Measures</th></tr>
<tr><td rowspan="2">5–5</td><td rowspan="2">Does the line pressure solenoid of the TCM output correct voltages? (See Page 7A2-59)
<table>
<tr><th>Terminals</th><th>Voltage (V)</th><th>Measuring Conditions</th></tr>
<tr><td rowspan="2">B229-26</td><td>3.3–5.5</td><td>When the throttle is completely closed.</td></tr>
<tr><td>1.0–1.7</td><td>When the throttle is fully open.</td></tr>
</table></td><td>YES</td><td>Replace the A/T.</td></tr>
<tr><td>NO</td><td>Proceed to the next step.</td></tr>
<tr><td rowspan="2">5–6</td><td rowspan="2">Are signals properly input to the throttle position sensor of the TCM? (See Page 7A2-58)
<table>
<tr><th>Terminals</th><th>Voltage (V)</th><th>Measuring Conditions</th></tr>
<tr><td rowspan="2">⊕ B229-5 ⊖ B229-19</td><td>4.1–4.5</td><td>Release the accelerator (to close the throttle completely).</td></tr>
<tr><td>0.8–1.6</td><td>Depress the accelerator fully (to open the throttle fully).</td></tr>
</table></td><td>YES</td><td>Replace the TCM.
Check the ATF, and when a sign of “Burn” or “Damage” is found inside the A/T, replace the A/T as well.</td></tr>
<tr><td>NO</td><td>Proceed to the next step.</td></tr>
<tr><td rowspan="2">5–7</td><td rowspan="2">Is the supply voltage of the throttle position sensor satisfactory? (See Page 7A2-59)
<table>
<tr><th>Terminals</th><th>Voltage (V)</th><th>Measuring Condition</th></tr>
<tr><td>⊕ ⊖
B229-18 ‹ › B229-19</td><td>4.5–5.5</td><td>Key switch “ON”</td></tr>
</table></td><td>YES</td><td>As the inside of the A/T is considered to be damaged, replace the A/T.</td></tr>
<tr><td>NO</td><td>Check the power circuit of the throttle position sensor.
When it is in order, replace the TCM.</td></tr>
</table>

A/T: Automatic Transmission ATF: Automatic Transmission Fluid TCM: Transmission Control Module

6	**At acceleration, the engine races and slippage occurs.**
Situations	• When the accelerator is depressed to start driving, the engine rotates faster, but the speed does not increase. • Even if the accelerator is depressed for acceleration during a drive, only the engine rotates faster but the speed does not increase.
Causes	① The ATF is not sufficient. ② The selector lever has not been assembled or adjusted correctly. ③ The throttle position sensor is defective or has not been adjusted correctly. ④ The line pressure has dropped. ⑤ The powertrain slips. ⑥ The control valve does not slide well. ⑦ The line pressure solenoid is defective.

Steps	Inspection		Corrective Measures
6–1	Is the ATF sufficient and in good order? (See Page 7A3-2) <Reference> • When the ATF is cloudy (pinkish), water is contained in the ATF.	YES	Proceed to the next step.
		NO	<Reference> • It is finally required to disassemble and repair the A/T. The inside of the A/T is considered to be damaged. Proceed to the next step, and find causes of the trouble. When the ATF is cloudy, replace the A/T and check the route (radiator, etc.) through which water has entered the A/T.
6–2	Is the self-diagnosis satisfactory? (See Page 7A2-3)	YES	Proceed to the next step.
		NO	A DTC appears. Check the relevant DTC section.
6–3	Is the line pressure sufficient? kPa (kg/cm²/PSI)	YES	Replace the A/T.
		NO	Replace the selector lever. OK → Proceed to the next step. NG → Adjust or replace the selector lever.
6–4	Is the output voltage of the line pressure solenoid of the TCM satisfactory? (See Page 7A2-59)	YES	Replace the A/T.
		NO	Proceed to the next step.

Range	Idling pressure	Stall pressure
D	529–784 (5.4-8.0/77-114)	990–1480 (10.1-15.1/144-215)
R	755-1127 (7.7-11.5/110-164)	1401-2107 (14.3-21.5/203-306)

Terminals	Voltage (V)	Measuring Conditions
B229-26	3.3–5.5	When the throttle is completely closed.
	1.0–1.7	When the throttle is fully open.

A/T: Automatic Transmission ATF: Automatic Transmission Fluid DTC: Diagnostic Trouble Code
TCM: Transmission Control Module

<table>
<tr><th>Steps</th><th colspan="2">Inspection</th><th>Corrective Measures</th></tr>
<tr><td rowspan="2">6–5</td><td colspan="2">Are signals properly input to the throttle position sensor of the TCM? (See Page 7A2-58)
<table><tr><th>Terminals</th><th>Voltage (V)</th><th>Measuring Conditions</th></tr><tr><td rowspan="2">⊕ B229-5 ↕ ⊖ B229-19</td><td>4.1–4.5</td><td>Release the accelerator (to close the throttle completely).</td></tr><tr><td>0.8–1.6</td><td>Depress the accelerator fully (to open the throttle fully).</td></tr></table></td><td>YES</td><td>Replace the TCM.
Check the ATF, and when a sign of “Burn” or “Damage” is found inside the A/T, replace the A/T as well.</td></tr>
<tr><td colspan="2"></td><td>NO</td><td>Proceed to the next step.</td></tr>
<tr><td rowspan="2">6–6</td><td colspan="2">Is the supply voltage of the throttle position sensor satisfactory? (See Page 7A2-59)
<table><tr><th>Terminals</th><th>Voltage (V)</th></tr><tr><td>⊕ B229-18 ↔ ⊖ B229-19</td><td>4.5–5.5</td></tr></table></td><td>YES</td><td>As the inside of the A/T is considered to be damaged, replace the A/T.</td></tr>
<tr><td colspan="2"></td><td>NO</td><td>Check the power circuit of the throttle position sensor.
When it is in order, replace the TCM.</td></tr>
</table>

A/T: Automatic Transmission ATF: Automatic Transmission Fluid TCM: Transmission Control Module

7	**The engine stalls when the selector lever is moved from the "P" or "N" to one of the drive ranges.**
Situations	• When the selector lever is changed from the "N" or "P" range to the drive range while the engine is idling, the engine stops immediately.
Causes	① The idling speed of the engine is slow. ② The control valve does not slide well. ③ The inhibitor switch is defective or has not been adjusted correctly. ④ The vehicle speed sensor 1 is defective. ⑤ The engine speed sensor is defective.

Steps	Inspection		Corrective Measures
7–1	Is the idling speed satisfactory? Idling speed : 775 - 825RPM	YES	Proceed to the next step.
		NO	Adjust the idling speed.
7–2	Is the trouble fixed when the connectors of Pin 12, Pin 16 and Pin 26 of the TCM are disconnected? Be sure to reset the connectors.	YES	Proceed to the next step.
		NO	Replace the A/T.
7–3	Are the voltages at the inhibitor switch and the vehicle speed sensor 1 of the TCM satisfactory? (See Pages 7A2-58 and 61)	YES	Proceed to the next step.
		NO	Check defective parts and the harness.

Terminal	Voltages (V)	Measuring Conditions
B231-3	10–16	"P" range
	1 max.	Other than "P" range
B231-9	10–16	"R" range
	1 max.	Other than "R" range
B231-4	10–16	"N" range
	1 max.	Other than "N" range
B231-10	10–16	"D" range
	1 max.	Other than "D" range
B231-11	10–16	"2" range
	1 max.	Other than "2" range
B231-6	10–16	"1" range
	1 max.	Other than "1" range
⊕ B229-3 ↕ ⊖ B229-16	0.35 (AC) min.	Vehicle speed of over 24km/h (15mph) (As the speed increases, the voltage increases continuously.)

AC: Alternating Current A/T: Automatic Transmission TCM: Transmission Control Module

<table>
<tr><th>Steps</th><th colspan="2">Inspection</th><th>Corrective Measures</th></tr>
<tr><td rowspan="2">7–4</td><td colspan="2" rowspan="2">Are the voltage at the engine speed sensor terminal satisfactory? (See Page 7A2-58)
<table><tr><th>Terminal</th><th>Voltage (V)</th><th>Measuring conditions</th></tr><tr><td>B229-1</td><td>1 min.</td><td>The engine speed is 1000RPM approx.</td></tr></table></td><td>YES</td><td>Proceed to the next step.</td></tr>
<tr><td>NO</td><td>Check defective parts and the harness.</td></tr>
<tr><td rowspan="2">7–5</td><td colspan="2" rowspan="2">Is the potential difference between the ground terminal B229-3 or B229-16 of the TCM and the transmission case correct?
<table><tr><td>Potential difference</td><td>0V (when it is normal)</td></tr></table></td><td>YES</td><td>Replace the TCM.</td></tr>
<tr><td>NO</td><td>The grounding is considered not to be correct.
Check the grounding point.</td></tr>
</table>

TCM: Transmission Control Module

8	**The ATF blows off from the air breather pipe during driving.**		
Situations	• During a drive, ATF blows off from the air breather pipe.		
Causes	① The ATF is too much. ② Water enters the A/T from the outside.		
Steps	**Inspection**		**Corrective Measures**
8–1	Is the ATF at the proper level and in good order? (See Page 7A3-2) <Reference> • When the ATF is cloudy (pinkish), water is contained in the ATF.	YES	Proceed to the next step.
		NO	Adjust the ATF level when its condition is satisfactory but the level is too high. When its level is satisfactory but the condition is not, the inside of the A/T is considered to be damaged, so replace the A/T. When the ATF is cloudy, replace the A/T and check the route (radiator, etc.) through which water enters it.
8–2	Is the phenomenon improved during a drive after the ATF is adjusted to the "Low" level?	YES	Check the ATF while keeping it at the "Low" level. If the level rises, water is considered to have entered the A/T.
		NO	Replace the A/T.

A/T: Automatic Transmission ATF: Automatic Transmission Fluid

9	**Engine brake does not function.**		
Situations	• When the accelerator is released during a drive at an intermediate or high speed, the engine rotates at the idling speed and the vehicle drives free. • Also, when the accelerator is released during a drive at a low speed with the selector lever set in "2" or "1" range, the vehicle drives free.		
Causes	① The ATF is not sufficient. ② The powertrain slips. ③ The control valve does not slide well. ④ The throttle position sensor is defective or has not been adjusted correctly. ⑤ The O/D OFF switch is defective. ⑥ The inhibitor switch is defective or has not been adjusted correctly. ⑦ The vehicle speed sensor 1 is defective.		
Steps	**Inspection**		**Corrective Measures**
9–1	Is the ATF sufficient or in good order? (See Page 7A3-2) <Reference> • When the ATF is cloudy (pinkish), water is contained in the ATF.	YES	Proceed to the next step.
		NO	<Reference> • It is finally required to disassemble and repair the A/T. The inside of the A/T is considered to be damaged. Proceed to the next step, and find causes of the trouble. When the ATF is cloudy, check the route (radiator, etc.) through which water enter the ATF.
9–2	Is the self-diagnosis satisfactory? (See Page 7A2-3)	YES	Proceed to the next step.
		NO	A DTC appears. Check the relevant DTC section.
9–3	Does such a phenomenon occur as "At the time of acceleration, the engine races or the clutch slips"?	YES	The powertrain is considered to slip. Proceed to the Abnormal Phenomena 6 "At acceleration, the engine races and slippage occurs."
		NO	Proceed to the next step.
9–4	Is engine braking effective with the selector lever set in the "1" range?	YES	Proceed to the next step.
		NO	The inside of the A/T is considered to be defective. Check the ATF, and if internal parts seem to be burnt, replace the A/T.

A/T: Automatic Transmission ATF: Automatic Transmission Fluid DTC: Diagnostic Trouble Code O/D: Overdrive
TCM: Transmission Control Module

Steps	Inspection		Corrective Measures
9–5	Are voltages at the inhibitor switch, O/D OFF switch, throttle position sensor and vehicle speed sensor 1 terminal of the TCM are satisfactory? (See Pages 7A2-58 and 61)	YES	Replace the TCM.
		NO	Check defective parts and the harness.

Terminal	Voltages (V)	Measuring Conditions
B231-3	10–16	"P" range
	1 max.	Other than "P" range
B231-9	10–16	"R" range
	1 max.	Other than "R" range
B231-4	10–16	"N" range
	1 max.	Other than "N" range
B231-10	10–16	"D" range
	1 max.	Other than "D" range
B231-11	10–16	"2" range
	1 max.	Other than "2" range
B231-6	10–16	"1" range
	1 max.	Other than "1" range
B230-6	10–16	O/D OFF switch "OFF"
	1 max.	O/D OFF switch "ON"
⊕ B229-5 ↕ ⊖ B229-19	4.1–4.5	Release the accelerator (to close the throttle completely).
	0.8–1.6	Depress the accelerator fully (to fully open the throttle).
⊕ B229-3 ↕ ⊖ B229-16	0.35 (AC) min.	Vehicle speed of over 24km/h (15mph) (As the speed increases, the voltage increases continuously.)

AC: Alternating Current O/D: Overdrive TCM: Transmission Control Module

WIRING DIAGRAM

LHD model:

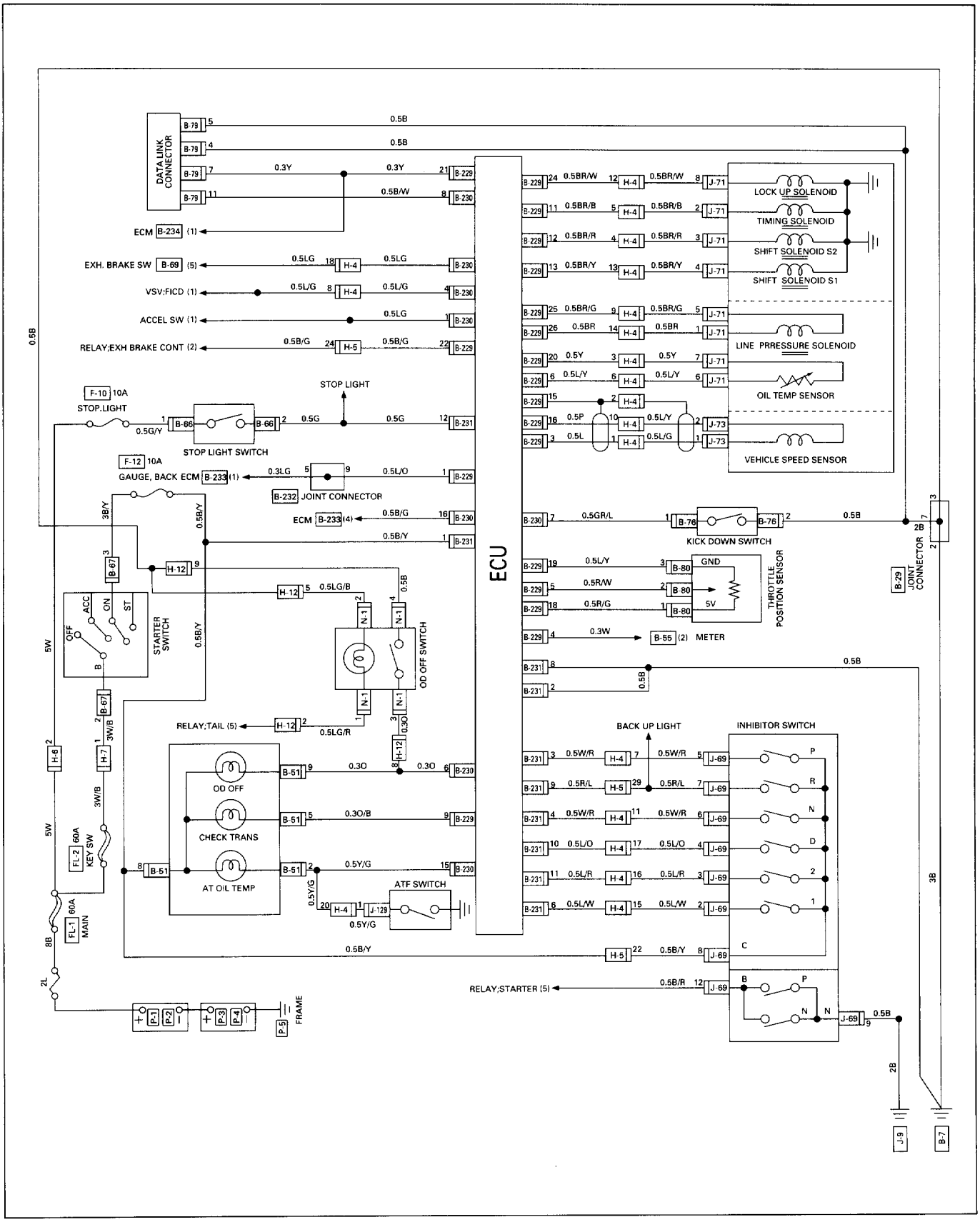

Figure 11-A. Wiring Diagram(LHD model)

RHD model:

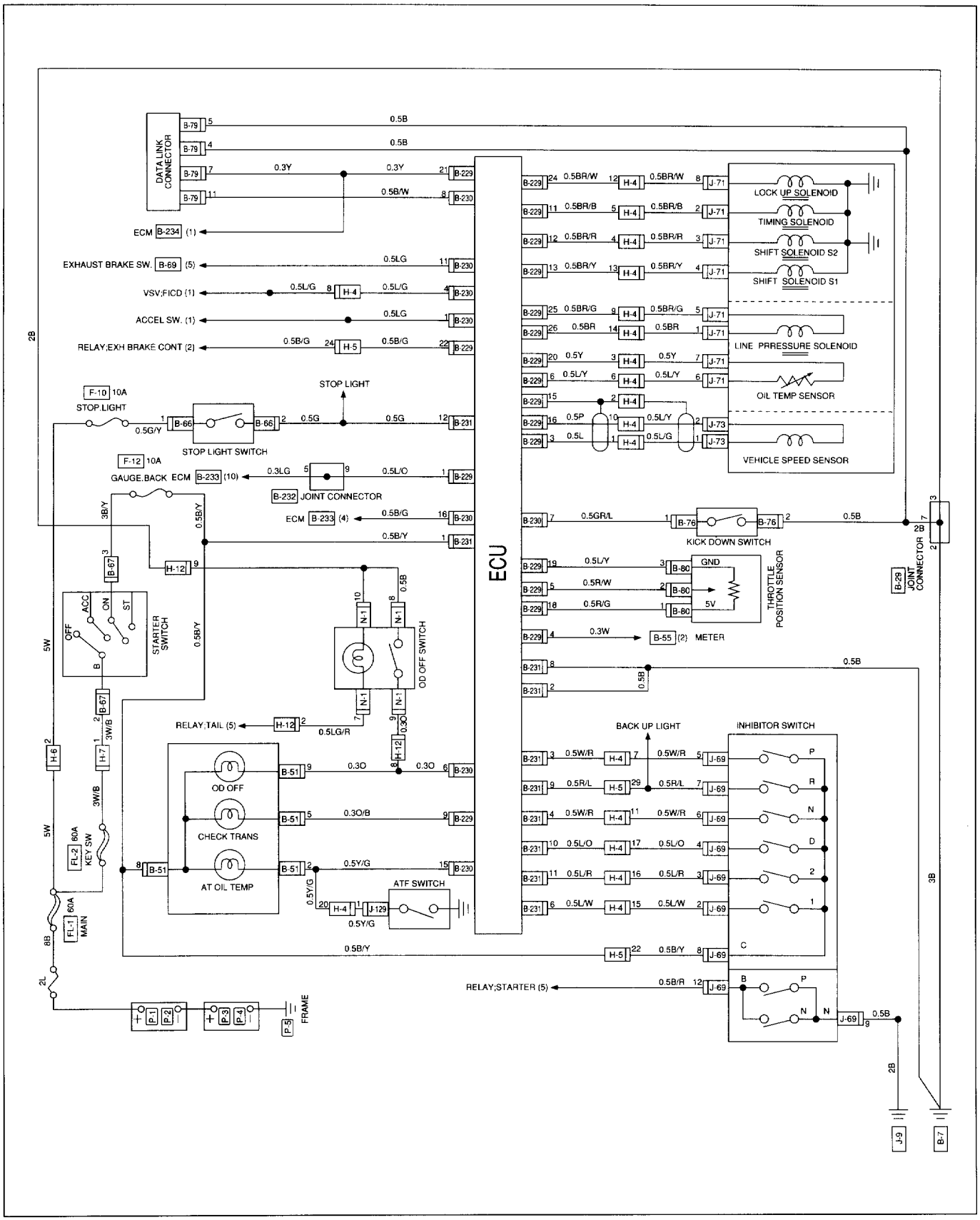

Figure 11-B. Wiring Diagram(RHD model)

PARTS LOCATION

This illustration is based on LHD model.

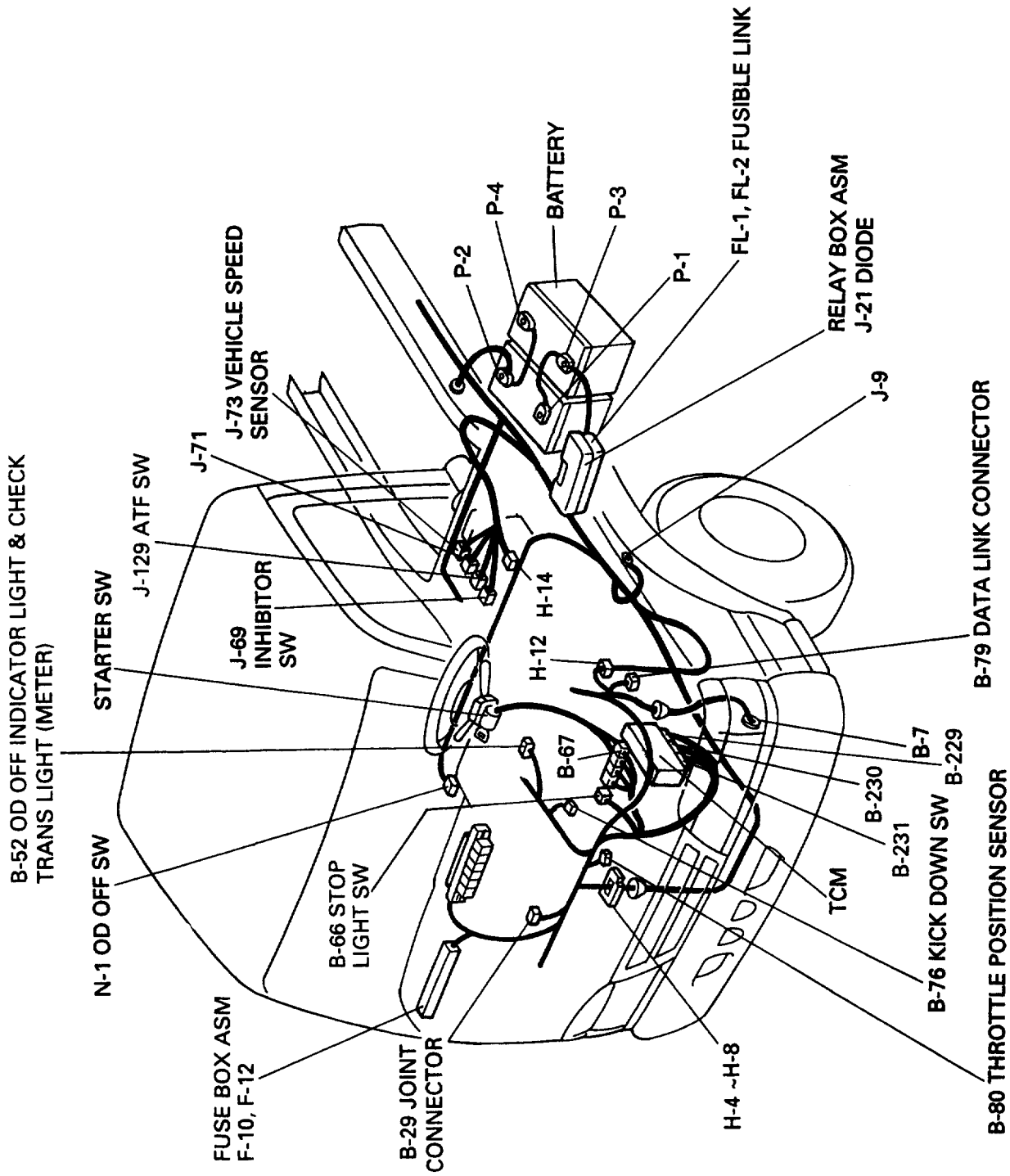

Figure 12. Parts Location

CONNECTOR CONFIGURATIONS (1)

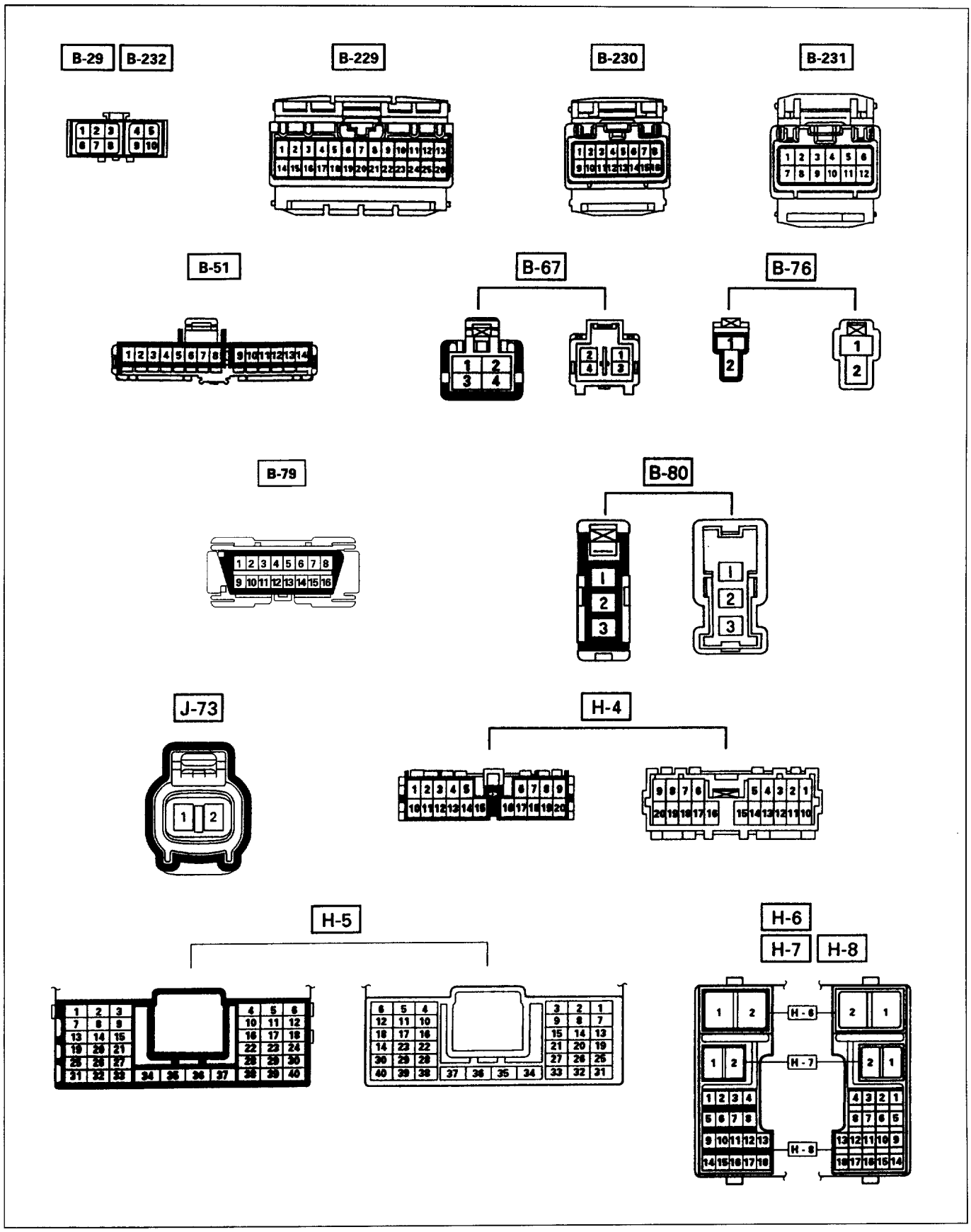

Figure 13. Connector Configurations (1)

CONNECTOR CONFIGURATIONS (2)

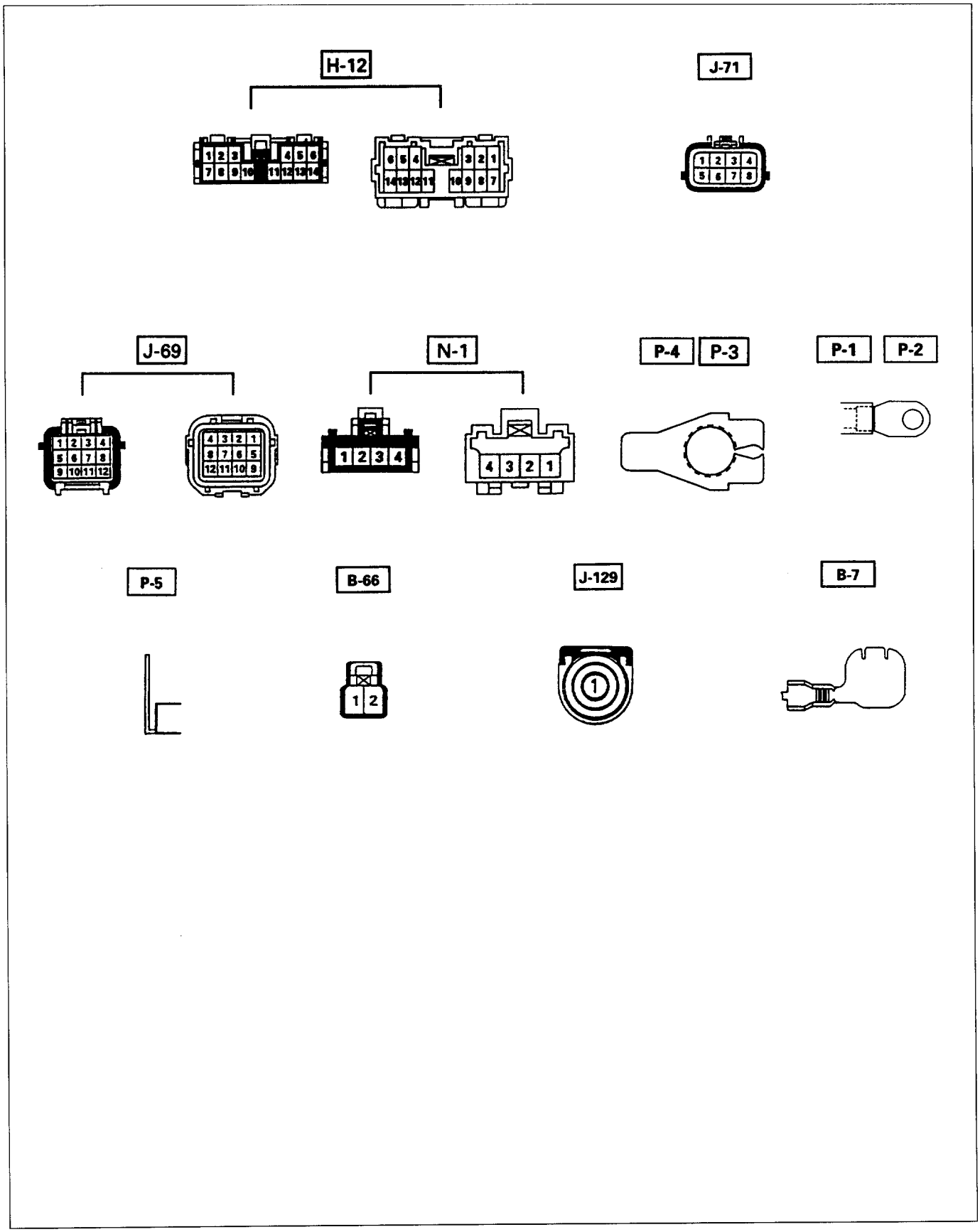

Figure 14. Connector Configurations (2)

CONTROL SIGNAL INSPECTION

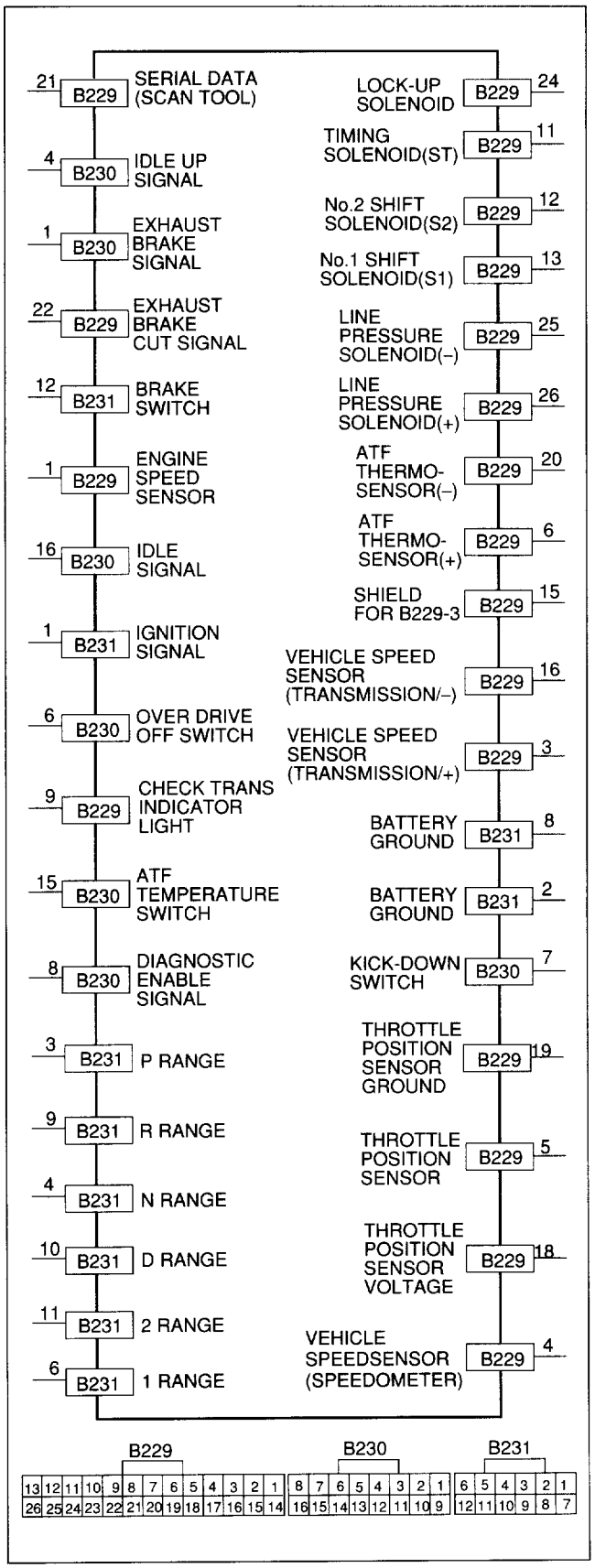

Figure 15. TCM Connector Pin

Control signal inspection is done to check for transmission and transmission control module (TCM) problems which cannot be detected by self diagnosis.
Additionally, it serves as a back-up check for self diagnosis.

Measure the voltage drop and make a continuity test for each of the sensors, solenoids, and switches.

If the voltage is within the specified range and continuity exists, that particular area of the TCM and automatic transmission assembly is normal.

If voltage deviation or lack of continuity is discovered, disconnect the applicable parts and check each of them individually.

This will allow you to determine the trouble location (TCM, automatic transmission unit, or another area of the vehicle).

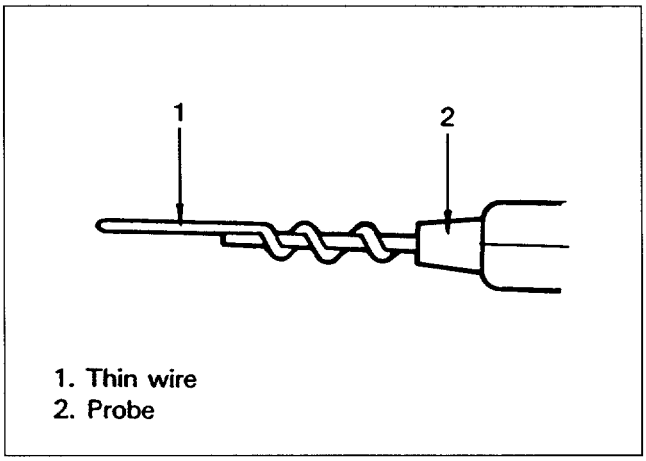

Figure 16. Inspection Tool

Inspection Tool

Use a circuit tester to measure voltage and circuit continuity.

Refer to the following table for the specified voltage ranges.

TCM terminals are extremely small.

Wrap a piece of thin wire (1) around the probe of tester (2) (figure 16).

This will make measurement easier.

TCM Terminal No. (Wire Color)		Standard Voltage	Inspection Condition	Signal Type	Circuit
Tester (–)	Tester (+)				
B231-2 (B) or B231-8 (B)	B229-1 (L/O)	More than 1.0 (Intermittent AC)	At an engine speed of approx. 1,000 RPM	Input	Engine speed sensor
	B229-2	Not used	—	—	—
B229-16 (P)	B229-3 (L)	More than 0.35 (AC)	Vehicle speed 24 km/h (15 mph) (Voltage increases in proportion to the speed)	Input	Vehicle speed sensor (Transmission)
		0	Vehicle stopped		
B231-2 (B) or B231-8 (B)	B229-4 (L/G)	0–5	Vehicle moved at slowest possible speed at least 1 meter	Input	Vehicle speed sensor (SPEEDOMETER)
B229-19 (L/Y)	B229-5 (R/W)	4.1–4.5	Accelerator pedal fully closed	Input	Throttle position sensor
		0.8–1.6	Accelerator pedal fully opened		
B229-20 (Y)	B229-6 (L/Y)	0.9	ATF temp. approx. 10 °C (50 °F)	Input	ATF thermosensor
		0.3	ATF temp. approx. 40 °C (104 °F)		
B231-2 (B) or B231-8 (B)	B229-7	Not used	—	—	—
	B229-8	Not used	—	—	—
	B229-9 (O/B)	10–16	Normally state	Output	Check trans light
		Less than 3.0	In order to 2 seconds when after the key switch "ON"		
	B229-10	Not used	—	—	—
	B229-11 (R/B)	10–16	Shift up to 2nd or 3rd kick down to 1st	Output	Timing solenoid (ST)
		Less than 1.0	Normally state		
	B229-12 (BR/R)	10–16	Driving at "D2" and "D3" (No.2 shift solenoid (S2) "ON")	Output	No.2 shift solenoid (S2)
		Less than 1.0	Driving at "D1" and "D4" (No.2 shift solenoid (S2) "OFF")		

AC: Alternating Current ATF: Automatic Transmission Fluid TCM: Transmission Control Module

TCM Terminal No. (Wire Color)		Standard Voltage	Inspection Condition	Signal Type	Circuit
Tester (–)	Tester (+)				
B231-2 (B) or B231-8 (B)	B229-13 (BR/Y)	10–16	Driving at "D1" and "D2" (No.1 shift solenoid (S1) "ON")	Output	No.1 shift solenoid (S1)
		Less than 1.0	Driving at "D3" and "D4" (No.1 shift solenoid (S1) "OFF")		
	B229-14	Not used	—	—	—
	B229-15	—	—	—	Shield
	B229-17	Not used	—	—	—
B229-19 (L/Y)	B229-18 (R/G)	4.5–5.5	Key switch "ON"	Source	Throttle position sensor supply voltage
B231-2 (B) or B231-8 (B)	B229-21 (B/R)	—	—	—	"Scan Tool"
	B229-22 (B/G)	10–16	Vehicle speed 16 km/h (10 mph) selector "1" range	Output	Exhaust brake cut
		Less than 3.0	Selector "P" or "N" range		
	B229-23	Not used	—	—	—
	B229-24 (BR/W)	10–16	Lock-up "ON"	Output	Lock-up solenoid
		Less than 1.0	Lock-up "OFF"		
B229-25 (BR/G)	B229-26 (BR)	3.3–5.5 (AC)	Engine warmed up and stopped, Throttle fullly closed, key switch "ON"	Output	Line pressure duty solenoid
		1.0–1.7 (AC)	Engine warmed up and stopped, Throttle fullly opened, key switch "ON"		
B231-2 (B) or B231-8 (B)	B230-1 (LG)	10–16	Exhaust brake switch "ON"	Input	Exhaust brake
		Less than 1.0	Exhaust brake switch "OFF"		
	B230-2	Not used	—	—	—
	B230-3	Not used	—	—	—

TCM: Transmission Control Module

TCM Terminal No. (Wire Color)		Standard Voltage	Inspection Condition	Signal Type	Circuit
Tester (–)	Tester (+)				
B231-2 (B) or B231-8 (B)	B230-4 (L/G)	10–16	Air conditioner copmressor "ON"	Input	Engine idle up
		Less than 1.0	Air conditioner copmressor "OFF"		
	B230-5	Not used	—	—	—
	B230-6 (O)	10–16	O/D OFF switch "OFF"	Input	O/D OFF switch
		Less than 1.0	O/D OFF switch "ON"		
	B230-7 (GR/L)	10–16	Accelerator pedal "released"	Input	Kick down switch
		Less than 1.0	Accelerator pedal "depressed"		
	B230-8 (B/W)	10–16	Self diagnosis "OFF"	Input	Data link connector
		Less than 1.0	Self diagnosis "ON"		
	B230-9	Not used	—	—	—
	B230-10	Not used	—	—	—
	B230-11	Not used	—	—	—
	B230-12	Not used	—	—	—
	B230-13	Not used	—	—	—
	B230-14	Not used	—	—	—
	B230-15 (Y/G)	10–16	Normally state	Input	ATF thermo switch
		Less than 1.0	ATF temperature more than 147 °C		
	B230-16 (B/G)	10–16	Engine speed more than 880 RPM	Input	Idle signal
		Less than 1.0	Accelerator pedal full closed. Engine speed 400-880 RPM		

O/D: Overdrive TCM: Transmission Control Module

TCM Terminal No. (Wire Color)		Standard Voltage	Inspection Condition	Signal Type	Circuit
Tester (–)	Tester (+)				
B231-2 (B) or B231-8 (B)	B231-1 (BY)	10–16	Key switch "ON"	Source	Battery voltage
	B231-3 (W/R)	10–16	Selector "P" range	Input	"P" range switch
		Less than 1.0	Selector other than except "P" range		
	B231-4 (W/R)	10–16	Selector "N" range	Input	"N" range switch
		Less than 1.0	Selector other than except "N" range		
	B231-5	Not used	—	—	—
	B231-6 (L/W)	10–16	Selector "1" range	Input	"1" range switch
		Less than 1.0	Selector other than except "1" range		
	B231-7	Not used	—	—	—
	B231-9 (R/L)	10–16	Selector "R" range	Input	"R" range switch
		Less than 1.0	Selector other than except "R" range		
	B231-10 (L/O)	10–16	Selector "D" range	Input	"D" range switch
		Less than 1.0	Selector other than except "D" range		
	B231-11 (L/R)	10–16	Selector "2" range	Input	"2" range switch
		Less than 1.0	Selector other than except "2" range		
	B231-12 (G)	10–16	Stop light "ON"	Input	Stop light
		Less than 1.0	Stop light "OFF"		

TCM: Transmission Control Module

LINE PRESSURE TEST

The line pressure test checks oil pump and control valve pressure regulator valve function. It will also detect oil leakage.

CAUTION: The line pressure test always requires two persons with the first person checking the tire and tire stopper off the vehicle while the second person performs testing.

Line Pressure Test Procedure

1. Check the level of the engine coolant, the engine oil, and the automatic transmission fluid. Replenish if required.
2. Set the parking brake.
3. Place chocks at the front and rear of each tire.
4. Remove the pressure detection plug at the left side of the transmission.
5. Set a pressure gauge and adapter to the pressure detection plug hole.
   Tools Required:
   5-8840-0004-0 Pressure Gauge
   5-8840-2654-0 Adapter

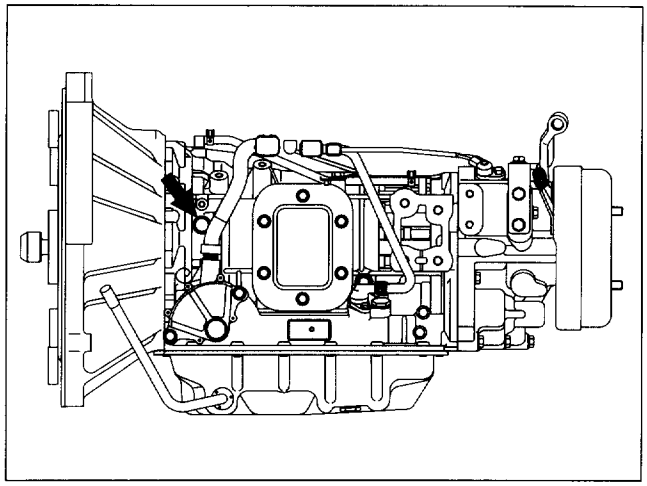

Figure 17. Detection Plug Hole

6. Start the engine and allow it to idle until the ATF temperature reaches 50–80°C (122–176°F) and check the idling rpm.
7. Hold the brake pedal down as far as it will go.
8. Place the selector in the "D" range.
9. Note the pressure gauge reading with the engine idling.
10. While depressing the accelerator pedal to the floor, quickly read the oil pressure at stalling rpm.

CAUTION: Release the accelerator pedal and stop the test if the rear wheels start to turn before the engine reaches the stalling rpm.

11. Repeat the test in the "R" range.

Measure

- Line Pressure kPa (kg/cm²/PSI)

Range	Engine Speed	
	Idling	Stalling
D	529–784 (5.4-8.0/77-114)	990–1480 (10.1-15.1/144-215)
R	755–1127 (7.7-11.5/110-164)	1401–2107 (14.3-21.5/203-306)

12. Install pressure detection plug to the transmission.
13. Tighten the pressure detection plug.

Tighten

- Detection Plug 27 N·m (2.8 kg·m/20 lb·ft)

Line Pressure Test Results	Probable Trouble Area
Line pressure is above the specified limit in all ranges	• Defective or poorly adjusted throttle position sensor • Sticking or short throttle pressure solenoid • Sticking regulator valve • Defective idle switch • Defective kick-down switch
Line pressure is below the specified limit in all ranges	• Poorly adjusted throttle position sensor • Sticking or short throttle pressure solenoid • Sticking regulator valve • Worn oil pump • Defective O/D direct clutch
Line pressure is below the specified limit in "D" ranges	• Oil leakage in "D" range line • Defective front clutch
Line pressure is below the specified limit in "R" ranges	• Oil leakage in "R" range line • Defective rear clutch • 1st and reverse brake malfunction

STALL TEST

The stall test allows you to check the transmission for internal abrasion and the one-way clutch for slippage. Torque converter performance can also be evaluated.

The stall test results together with the road test results will identify transmission components requiring servicing or adjustment.

CAUTION: When the clutch appears to be slipping in a road test, etc., or when the line pressure does not reach a preset value in a line pressure test, do not proceed to a stall test.

Stall Test Procedure

1. Set the parking brake.
2. Place chocks at the front and rear of each tire.
3. Check the level of the engine coolant, the engine oil, and the automatic transmission fluid. Replenish if required.
4. Start the engine and allow it to idle until the engine coolant temperature reaches 70–80°C (158–176°F).
5. Set a tachometer to the engine.
6. Hold the brake pedal down as far as it will go.
7. Place the selector in the "D" range.
8. Gradually push the accelerator pedal to the floor.
   The throttle will fully open.
   Note the engine speed at which the tachometer needle stabilizes.

   Measure

   - Stall speed 1,600–1,900 RPM

9. Release the accelerator pedal.
10. Place the selector in the "N" range.
11. Run the engine at 1,200 RPM for one minute. This will cool the transmission fluid.
12. Repeat Steps 6-11 for the "2", "1 ", and "R" ranges.

    CAUTION: Do not continuously run this test longer than 5 seconds so the transmission does not become overheated.

ROAD TEST

The road test should be performed by two people (one to drive and the other to note the required data) on a lightly traveled ordinary public road.

General Test Items

1. Compare the actual automatic shift speeds with the fixed shift schedule.
   a. Perform the diagnosis procedures.
   b. Note the actual shift up, shift down, and lock up speeds on the fixed shift schedule.
2. Check for shock or drag when the transmission shifts from one gear to another.
3. Check that the engine brake functions in the "2" and "1" ranges.
4. Check for abnormal noise or vibration.
   After completing the road test, make the necessary adjustments and repairs to the automatic transmission and related parts.

SHIFT POINT DIAGRAM AND LOCK-UP POINT DIAGRAM

In the shift point diagram and the lock-up point diagram, figures indicate vehicle speeds (in km/h) for the final gear ratio of 5.375 and for the tire radius of 0.373m (215/85R16). And vehicle speeds (in km/h) for other final ratios can be obtained by multiplying figures in this diagram by following coefficients.

Final Gear Ratio	Tire	Radius	Coefficient
5.375 (43/8)	215/85R16	0.373m	1.000
5.375 (43/8)	215/75R16	0.352m	0.944
5.571(39/7)	7.50-16-10	0.382m	0.988
5.571(39/7)	215/75R17.5	0.373m	0.965

The tolerance to measured values is ±3km/h.

Range \ Diagram	Shift Point Diagram
"D"	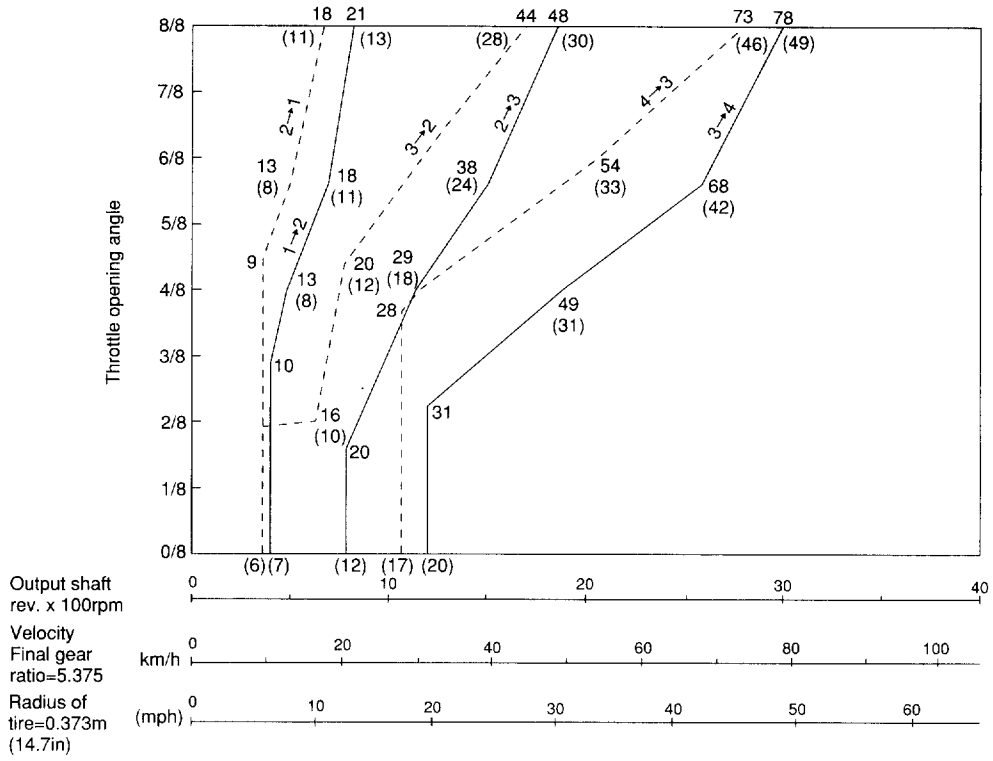

Range \ Diagram	Lock-up Point Diagram
"D" (O/D off switch "ON")	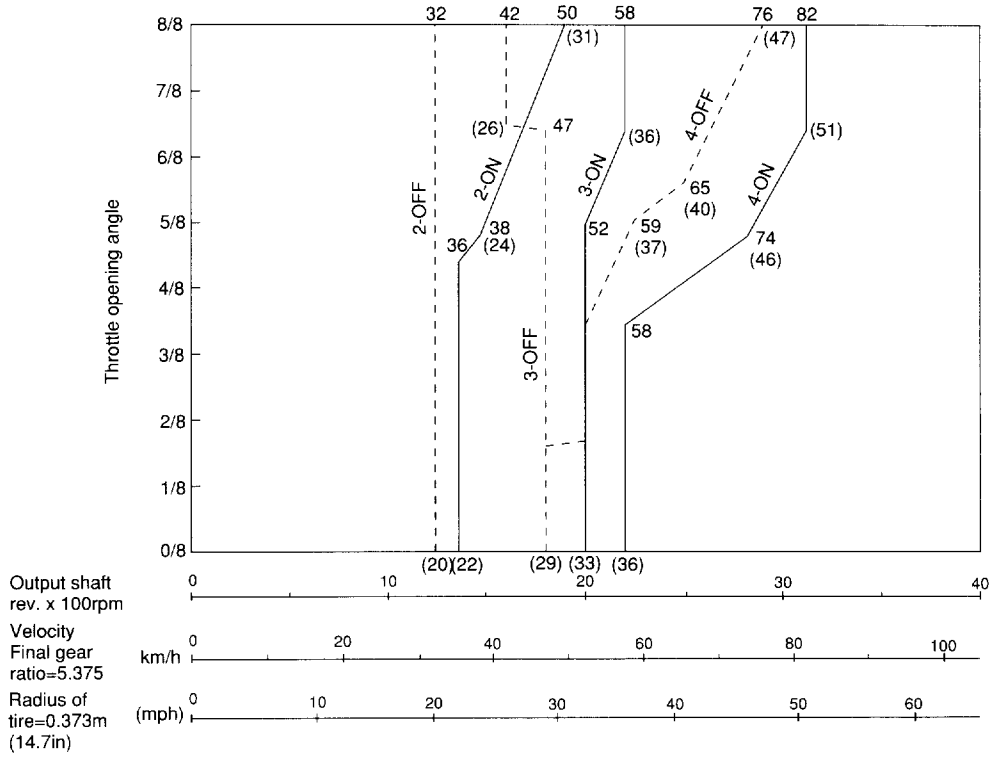

Range \ Diagram	Lock-up Point Diagram
"D" (O/D off switch "OFF")	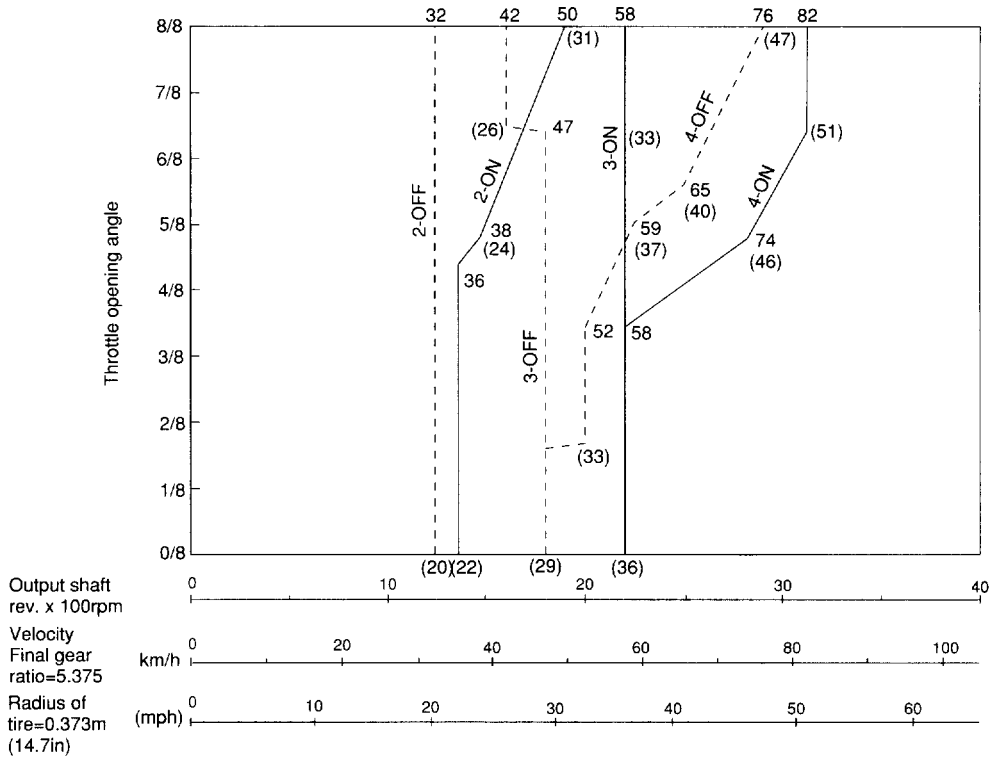

Range \ Diagram	Shift Point Diagram
"2"	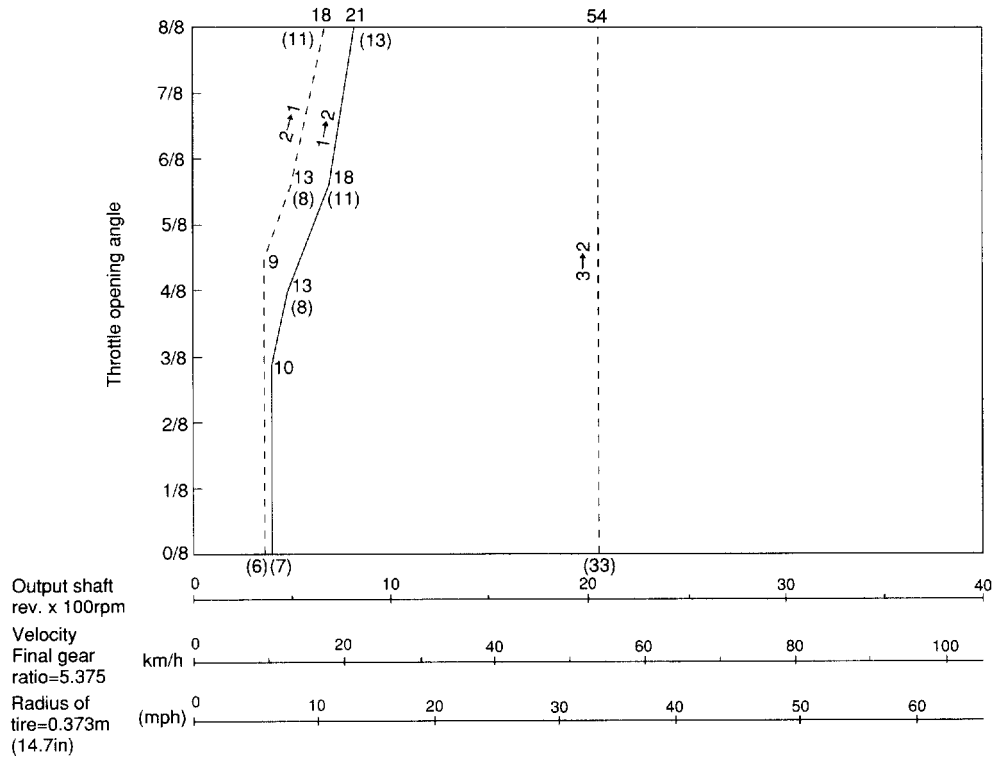

Range \ Diagram	Lock-up Point Diagram
"2"	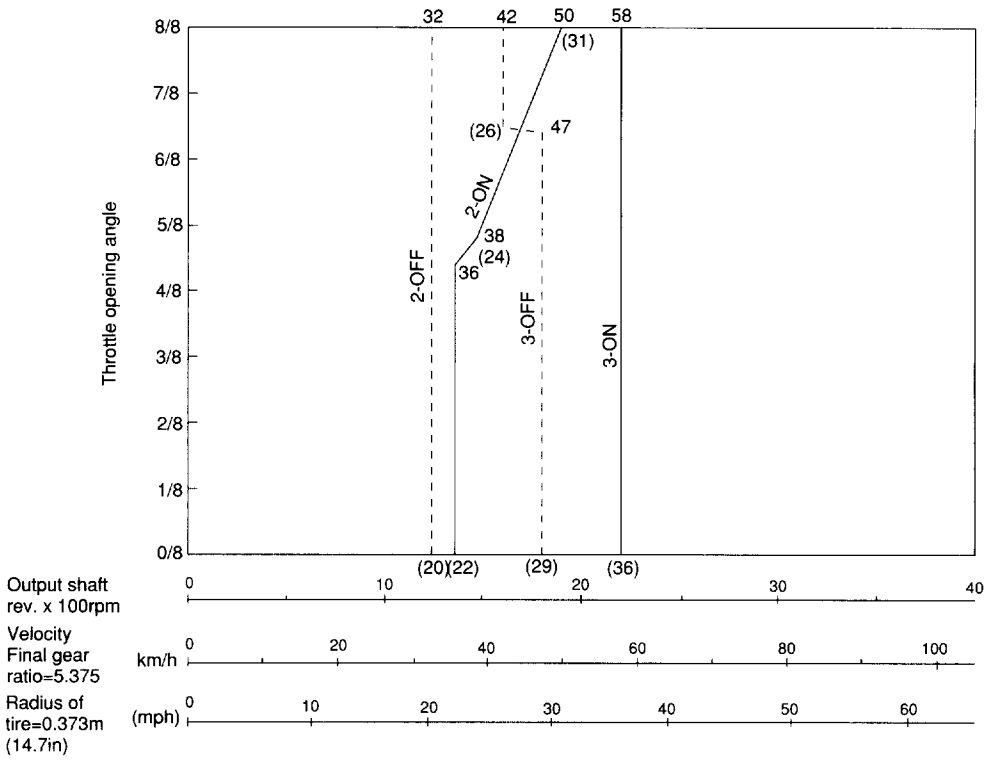

Range \ Diagram	Shift Point Diagram
"1"	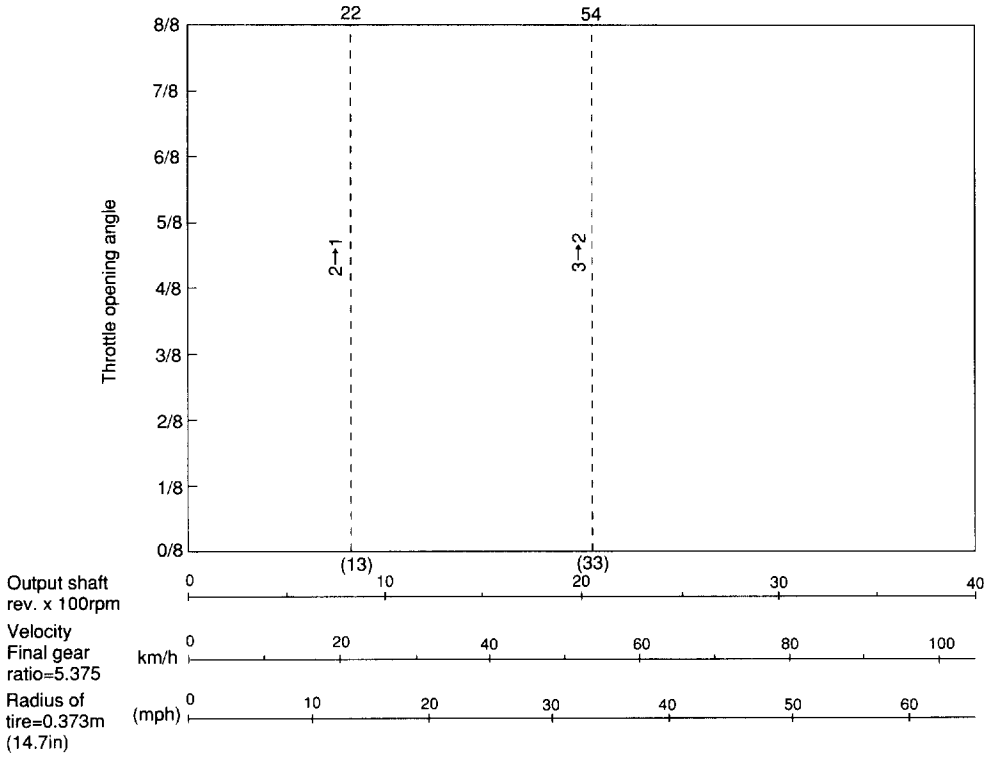

DIAGNOSIS BY USING SCAN TOOL

TECH 2 SCAN TOOL

In this 450-43LE transmission, diagnosis can be perfomed for electrical faults by using the diagnosis equipment called "TECH 2".

When the check trans light blinks or when an electrical fault in the transmission may probably exist, check diagnostic trouble codes by using the "TECH 2".

For the operations of "TECH 2", refer to following instruction and the User Guide in the "TECH 2" kit.

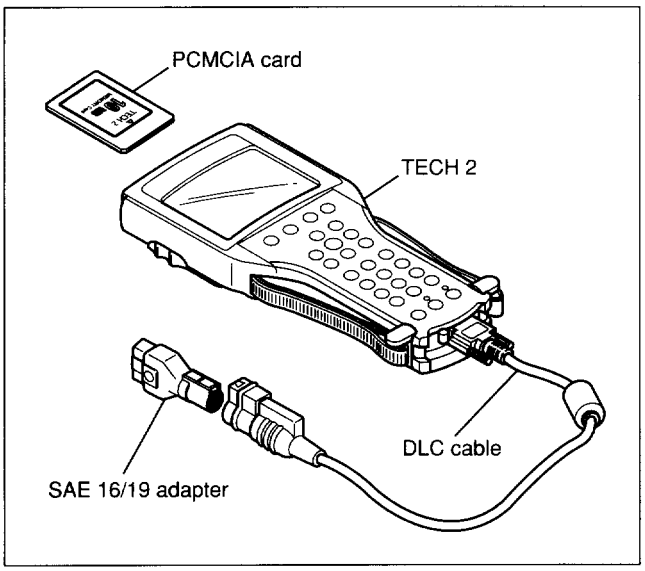

Figure 18. TECH 2 Scan Tool

1. Before operating the Isuzu PCMCIA card with the TECH-2, the following steps must be performed:
   1) The Isuzu 99 System PCMCIA card inserts into the TECH-2.
   2) Connect the SAE 16/19 adapter to the DLC cable.
   3) Connect the DLC cable to the TECH-2.
   4) Make sure the vehicle ignition is off.
   5)Connect the TECH-2 SAE 16/19 adapter to the vehicle DLC
   The DLC is the black 16-pin connector and it is tied to the support bracket locating under the brake and clutch fluid tank.
   6) The vehicle ignition turns on.
   7) Push the "PWR(Power)" key.
   8) Verify the TECH-2 power up display.

Figure 19. TECH 2 Display(1)

2. Follow the operating procedure below.

① Press "ENTER" key.

Tech 2

Press (ENTER) To Continue

② Press "F0" key, or select "F0 Diagnostics" with selection key and press "ENTER" key.

Main Menu

F0 : Diagnostics
F1 : View Capture Data
F2 : Tool Options
F3 : Download/Upload Help

③ Select "(X) 1999" with selection key and press "ENTER" key.

Vehicle Identification
Select one of the following
Model Year(S)
(X) 1999

(X) 1999

④ Select "(N*) ELF, NPR, NQR" with selection key and press "ENTER" key.

Vehicle Identification
Select one of the following
Vehicle Type(S)
(UB) Trooper, Bighorn
(UE) Rodeo/Amigo, Wizard
(N*) ELF, NPR, NQR

(N*) ELF, NPR, NQR

⑤ Press "F1" key, or select "F1 Transmission" with selection key and press "ENTER" key.

System Selection Menu

(W) 1999 (N*) ELF, NPR, NQR

F0 : Engine
F1 : Transmission
F2 : Chassis
F3 : Body

Continue to next page.

Figure 20. TECH 2 Display (2)

Continued

⑥ Select "A445 AT" with selection key and press "ENTER" key.

Vehicle Identification
Select one of the following
Transmission
A445 AT
AT JR403E
Other

A445 AT

⑦ Press "ENTER" key.

System Identification
(W) 1999 (N*) ELF, NPR, NQR
Electronic System : AT A445

Turn On Ignition!

Confirm

⑧ Press the "Soft key" under the "Confirm" box.

System Identification
(W) 1999 (N*) ELF, NPR, NQR
Electronic System : AT A445

PartNumber : 8972050340
Alpha Code : ZA

Confirm | More

⑨ Select required item from application menu.

Application Menu

F0 : Diagnosis
F1 : Data Display
F2 : Actuator Test

Figure 21. TECH 2 Display (3)

MODE F1: DATA DISPLAY

Item	Key switch ON Engine OFF	Engine running at idle
Current Gear	1	1
Selector Position	P	P
Vehicle Speed Sensor 1 (AT side)	0 km/h	0 km/h
Vehicle Speed Sensor 2 (Meter side)	0 km/h	0 km/h
Engine Speed	0 RPM	700-850 RPM
PC (Line Pressure) Solenoid Desired Current	1.00 A	1.00 A
PC (Line Pressure) Solenoid Actual Current	1.00 A	1.00 A
Engine Runtime	***sec	***sec
TPS (Throttle Position Sensor) Voltage	3.80-4.50V	3.80-4.50V
TPS (Throttle Position Sensor) Angle	0%	0%
ATF Temperature	**°C	**°C
ATF Temperature Sensor Voltage	**V	**V
Battery Voltage	10-16V	10-16V
Inhibitor Switch P	ON 12V	ON 12V
Inhibitor Switch R	OFF 0V	OFF 0V
Inhibitor Switch N	OFF 0V	OFF 0V
Inhibitor Switch D	OFF 0V	OFF 0V
Inhibitor Switch 2	OFF 0V	OFF 0V
Inhibitor Switch 1	OFF 0V	OFF 0V
OD OFF Switch	OFF 12V	OFF 12V
PTO Switch	OFF 0V	OFF 0V
Lock Up Duty (Solenoid)	0%	0%
Idle Signal	OFF 12V	ON 0V
Kick Down Switch	OFF 12V	OFF 12V
BTS Switch (Oil temp. Switch)	OFF 12V	OFF 12V
EXH. Brake Switch	OFF 0V	OFF 0V
Brake Switch	OFF 0V	OFF 0V
Diagnosis Switch	OPEN	OPEN
First Idle Control	OFF 0V	OFF 0V
QWS Switch	OFF 0V	OFF 0V
Shift Solenoid S1	ACTIVE 12V	ACTIVE 12V
Shift Solenoid S2	INACTIVE 0V	INACTIVE 0V
Shift Timing Solenoid ST	INACTIVE 0V	INACTIVE 0V
PTO Solenoid	INACTIVE 0V	INACTIVE 0V
Engine Overrun Warning	OFF 12V	OFF 12V
Transmission Check Light	OFF 12V	OFF 12V
Exhaust Brake Cut	ON 0V	ON 0V
QWS Cut	OFF 12V	OFF 12V

SPECIAL TOOLS

ILLUSTRATION	**TOOL NO.** TOOL NAME
	TECH 2 Scan Tool Kit
	5-8840-0004-0 **(J-29770-A)** Pressure Gauge
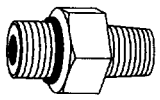	**5-8840-2654-0** **(J-43407)** Adapter

7A3 ON-VEHICLE SERVICE

CONTENTS

SUBJECT	PAGE
Description	7A3- 2
Automatic Transmission Fluid (ATF)	7A3- 2
ATF Level	7A3- 2
ATF Change	7A3- 3
Transmission Control Module (TCM)	7A3- 3
Throttle Position Sensor and Kick-Down Switch	7A3- 4
Inhibitor Switch	7A3- 6
Vehicle Speed Sensor-1	7A3- 8
Vehicle Speed Sensor-2	7A3- 9
Automatic Transmission Fluid (ATF) Temperature Switch	7A3-10
Engine Speed Sensor	7A3-11
Overdrive OFF Switch	7A3-11
Oil Pan	7A3-12
Oil Filler Tube	7A3-13
Oil Strainer	7A3-14
Solenoids	7A3-14
Rear Cover Oil Seal	7A3-15
Vehicle Speed (Speedometer) Sensor Driven Gear	7A3-16
Control Lever Assembly	7A3-17
Control Cable	7A3-18
Transmission Assembly	7A3-20
Torque Converter	7A3-22
Specifications	7A3-23
Special Tools	7A3-23

DESCRIPTION

Before performing on-vehicle service on the automatic transmission, check that the engine idling speed and general engine condition are normal.

AUTOMATIC TRANSMISSION FLUID (ATF)

Inspect

Remove the transmission dipstick to check the condition of the ATF.

Clean the dipstick and look for gum or varnish.

Gum or varnish indicate scorching of the clutch and other parts.

The transmission control module, the transmission unit, and the vehicle must be carefully checked if gum or varnish is present.

ATF LEVEL

Inspect

CAUTION:
Steady the vehicle level on a flat road. Apply the parking brake and block the wheel.

- **An improper oil level (too high or too low) can cause trouble.**
- **Check the idle rpm before starting the level check.**
- **Keep the transmission fully warmed (ATF temperature: 70 - 80°C/ 150 - 176°F) during the check.**

1. Depress the brake pedal and start the engine.
2. With the engine idling, shift the gear slowly in every range from "P" to "L" ranges, and return to the "P" range (figure 1).
3. With the engine idling, remove the level gauge and apply compressed air to remove threads or other foreign items. Insert the level gauge, remove it again, and confirm that the oil level is within the "HOT" range (figure 2).

CAUTION:

- **When checking the oil level at low ATF temperatures (20 - 30°C/ 68 - 86°F) during oil change, etc., adjust the oil level so that it is within the "COLD" range (figure 3). Then, recheck the oil level in the fully warmed condition (70 - 80°C/ 150 - 176°F).**
- **Use the lower level if the oil level varies between the front and back of the level gauge.**

4. If the oil level is low, suspect oil leakage.

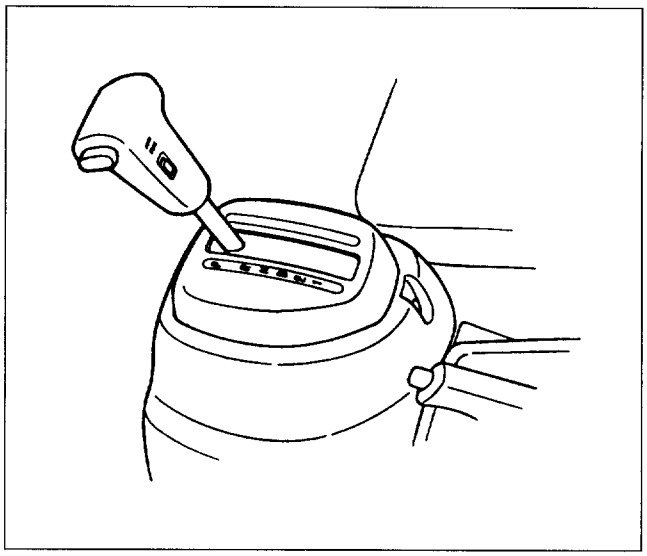

Figure 1. Moving Gear Selector

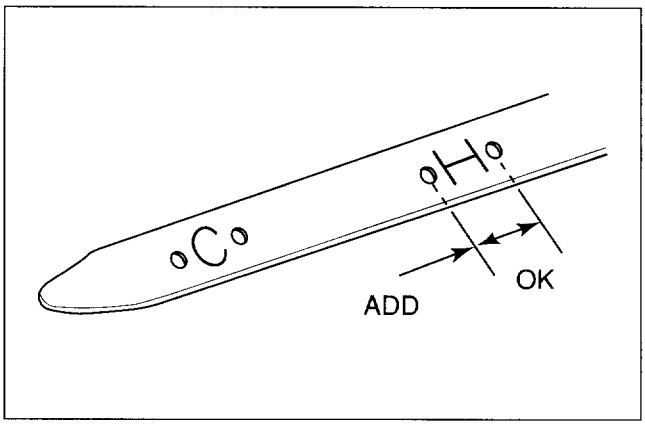

Figure 2. Hot ATF Level

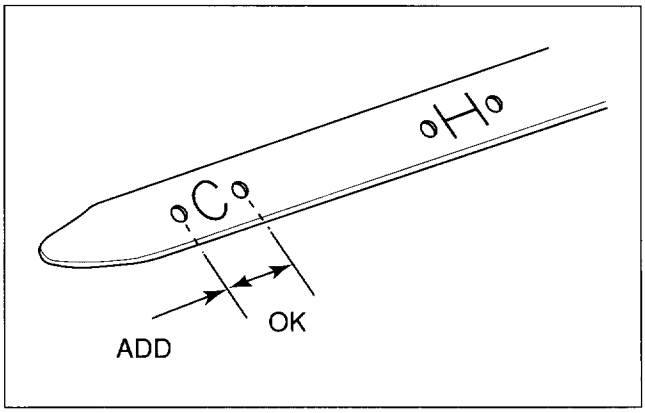

Figure 3. Cold ATF Level

AUTOMATIC TRANSMISSION FLUID (ATF) CHANGE

1. Start the engine and allow it to idle until the ATF reaches a temperature of 40–50°C (104–122°F).
2. Park the vehicle on level ground and block the wheels.
3. Stop the engine.
4. Raise vehicle and support with suitable safety stands.
5. Remove the drain plug from the oil pan and drain the ATF (approximately 4 liters).
6. Remove the oil pan.
7. Inspect the oil pan (details written below).
8. Install the oil pan.

NOTICE: Use new gasket. Clean the oil pan and magnet.

Tighten

- Oil pan bolts 7 N·m (0.7 kg·m / 61 lb·in)

9. Replace the gasket and install the drain plug.

Tighten

- Drain plug 27 N·m (2.8 kg·m / 20 lb·ft)

NOTICE: Do not reuse old washer (gasket). Clean the drain plug (especially the threaded section).

10. Remove the ATF filter element.
11. Install new ATF filter element.
12. Pour about 5 liters of new ATF. Then, add more ATF carefully as necessary using the level gage. Refer to "ATF LEVEL" previously in this section.

CAUTION: Keep the engine idle (do not stop it) during the oil level adjustment.

13. Remove the safety stands and wheel blocks.

Inspect

1. Check the drain plug tip for adhesion of foreign substances.
2. Check the drained ATF for color, smell and inclusion of foreign substances.
3. Check the oil pan bottom and magnet for adhesion of foreign substances.
   If a problem is discovered during those checks, the Automatic transmission must be overhauled.

TRANSMISSION CONTROL MODULE (TCM)

The TCM is located under the meter cluster (figure 4).

Remove or Disconnect

1. Block the wheels.
2. Negative battery cable.
3. Harness connectors (26 pin, 16 pin and 12 pin connectors).
4. Fixing nuts (1).
5. TCM (2).

Install or Connect

1. TCM.
2. Fixing nuts .
3. Harness Connectors.
4. Negative battery cable.
5. Remove the wheel blocks.

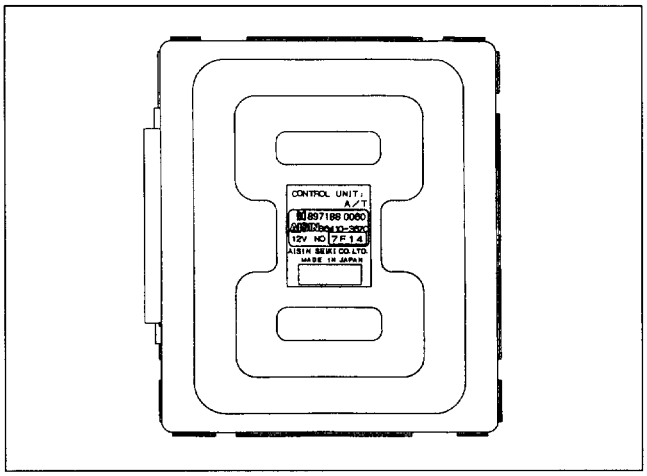

Figure 4. TCM

THROTTLE POSITION SENSOR AND KICK-DOWN SWITCH

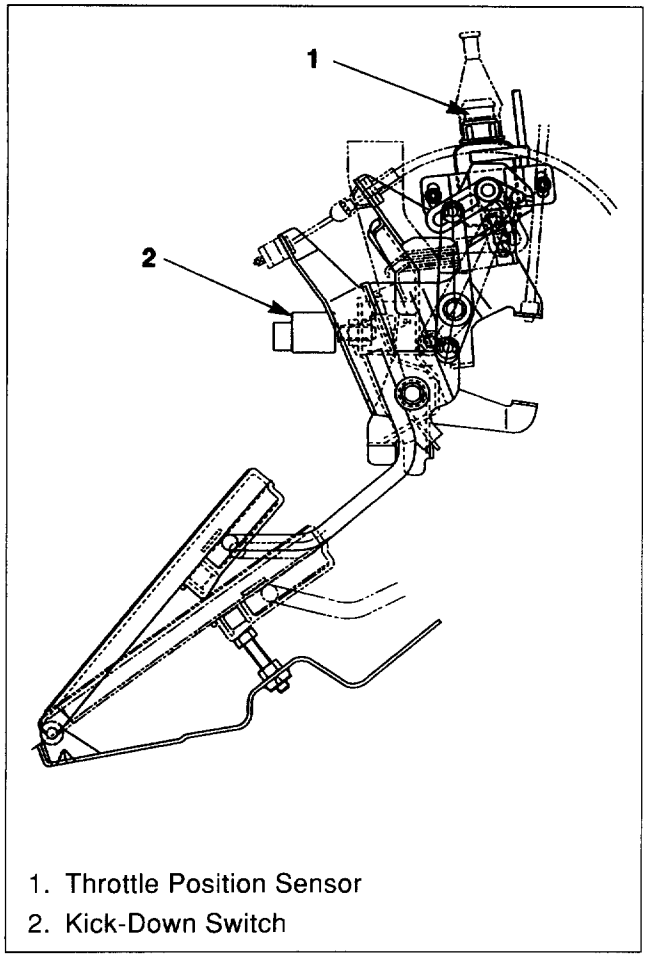

Figure 5. Throttle Position Sensor, Kick-Down Switch and Related Part

Throttle Position Sensor

The throttle position sensor is fitted to the accelerate linkage (figure 5).

The throttle position sensor should be adjusted under the following condition.

1. When shift shock is harsh.
2. When shift up is late.
3. When the following parts replaced.
   - Engine assembly or injection pump
   - Accelerator pedal
   - Throttle position sensor
   - Kick-down switch

Adjust (Figures 6 and 7)

Under the idling condition, set the throttle position sensor according to the following procedure:

1. Block the wheels.
2. Disconnect the battery negative cable.
3. Eliminate play of accelerator pedal cable.
4. Depress the accelerator pedal until injection pump side full open.
5. Adjust the stopper bolt that has no clearance.
6. Remove the throttle position sensor connectors.
7. Throttle position sensor terminals (5), (6), and (7).
   a. Apply 5 volts to the terminal (5).
   b. Measure the output voltage between the terminal(6) and (7) (Terminal (7) is ground).
   c. If the output voltage is 4.1 – 4.5 V, under the above condition, throttle position sensor setting is "OK".
   d. If the reading is beyond 4.1 – 4.5 V, loosen the throttle position sensor fixing bolts, and turn it right or left, so that the specified output voltage be obtained.
   After adjusting, tighten the throttle position sensor fixing bolts.

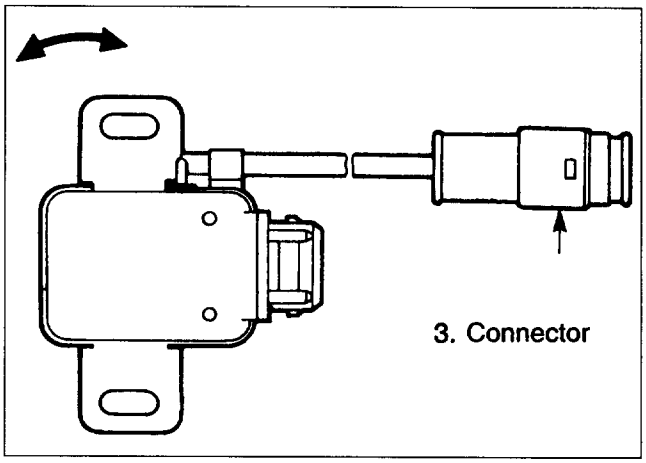

Figure 6. Throttle Position Sensor

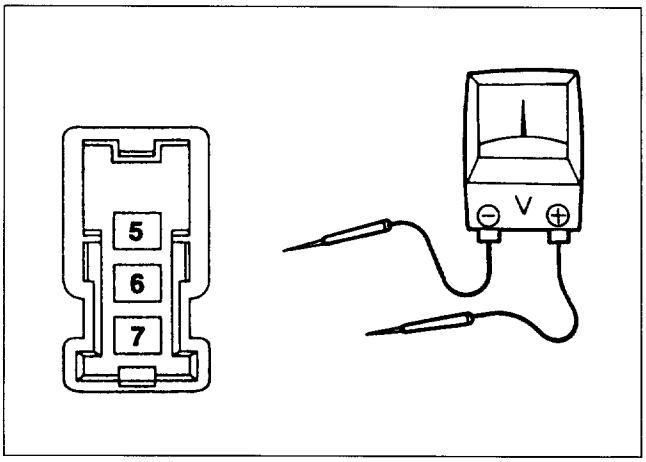

Figure 7. Throttle Position Sensor Connector

Re-learning of the Throttle Position Sensor Voltage

It need re-learning of the throttle position sensor voltage when following parts are replaced or adjusted.

- Engine assembly or injection pump
- Accelerator pedal, cable or linkage
- Throttle position sensor
- Kick-down switch

Clearing Memory of current Value of Throttle Position Sensor Voltage

To clear the memory, perform the following operation at once.

1. Turn the starter switch to ON position.
2. Turn the overdrive OFF switch to "ON" position.
3. Place the select lever in the "1" range.
4. Depress the accelerator pedal fully (= Kick-down switch is ON).
5. Depress the brake pedal (=Brake switch is ON).

If the memory is cleared normally in this procedure, the check trans light flashes 5 times.

Preparation

6. Disconnect FICD connector in order to inhibit it's operation.
7. Turn the starter switch to ON position.
8. Connect terminal 11 and 4 or 5 of the data link connector (DLC). The check trans light becomes flashing (0.4 seconds interval).
9. Place the select lever in the "P" range.

Learning voltage at full open position

10. Depress accelerator pedal by hand until injection pump side opens fully.
11. At the condition in step 10., depress brake pedal more than 3 seconds.
12. After check trans light changes from intermittent flashing→illuminate (3 seconds)→slow flashing 6 times→flashing again, then release the brake pedal. If check trans light does not change to illuminate (3 seconds), clear memory and try again from step 7.

Learning voltage at idle position

13. Start the engine.
14. Depress the accelerator pedal slowly 3 times. (The TCM try to search the point of idle position.)
15. Connect the FICD connector and remove the jumper wire from DLC connector.
    The flashing of check trans light will quits.
    NOTICE: In case of miss-operation, clear the memory and try again from step 6.

Confirmation of learning

16. Stop the engine. Turn the starter switch to "ON" position, the check trans light becomes flashing again. Depress the accelerator pedal fully (=kick-down switch is ON) and release the pedal slowly.
    If the full open position voltage is out of specification or the TCM learns no value, the check trans light flash continuously. Clear the memory and try again from step 6. If the flashing is stopped, learning operation is completed.

Kick-Down Switch

The kick-down switch is fitted to the accelerator linkage (figure 5).

Adjust (Figure 8)

1. Depress the accelerator pedal by hand until injection pump side opens fully.
2. At the above condition, adjust the projection level of the kick-down switch, so that it may become "ON".
3. "Tick, Tick" sound indicates that the kick-down switch turns to "ON" condition.
4. Connect the battery negative cable.
5. Remove the wheel blocks.

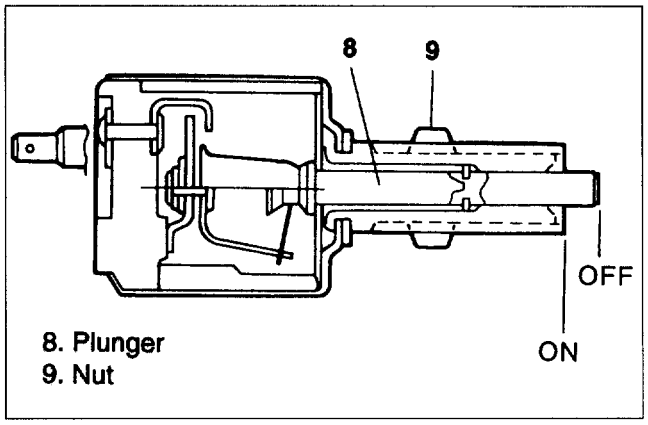

Figure 8. Kick-Down Switch

INHIBITOR SWITCH

The inhibitor switch is attached to the left side of the transmission.

Inspect (Figures 9, 10and 11)

1. Block the wheels.
2. Disconnect the negative battery cable.
3. Disconnect the control cable from the lever.
4. Remove the harness connector cover and disconnect the harness connectors (figure 11).
5. Use a ohmmeter to check the inhibitor switch continuity between the following terminals (figure 10).
6. Place the select lever in the "N" range (figure 9).

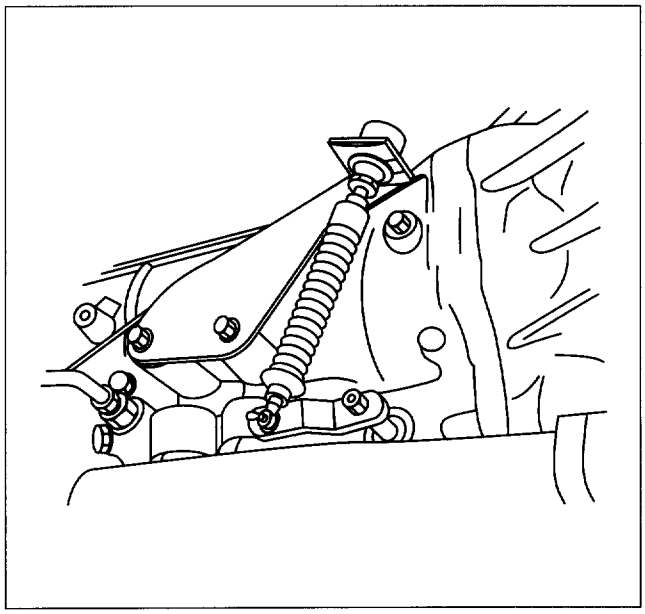

Figure 9. Selector Lever

7. Move the select lever to either side.
   Check the inhibitor switch continuity between the terminals shown in Step 5.
   The continuity readings should remain fairly steady as the select lever is moved.
   If there is no continuity or the continuity is intermittent, the inhibitor switch must be reinstalled correctly.
   After reinstallation, if there is still a problem with the inhibitor switch continuity, the switch must be replaced.
8. Connect the control cable to the lever.
9. Connect the harness connector and install the cover (figure 11).

	1	2	3	4	5	6	7	8	9
P				○			○	○	○
R						○	○		
N					○		○	○	○
D			○				○		
2		○					○		
1	○						○		

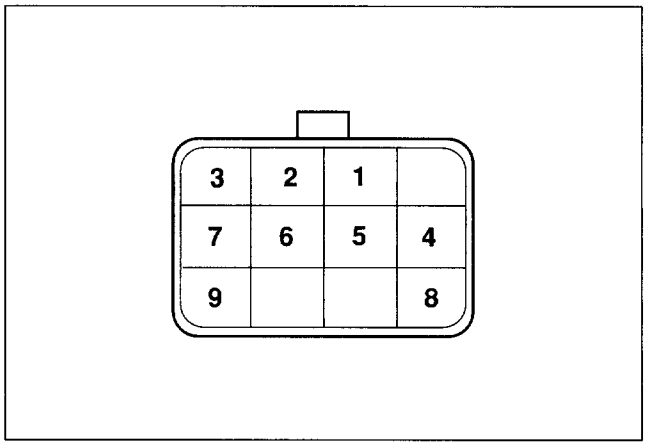

Figure 10. Inhibitor Switch Connector

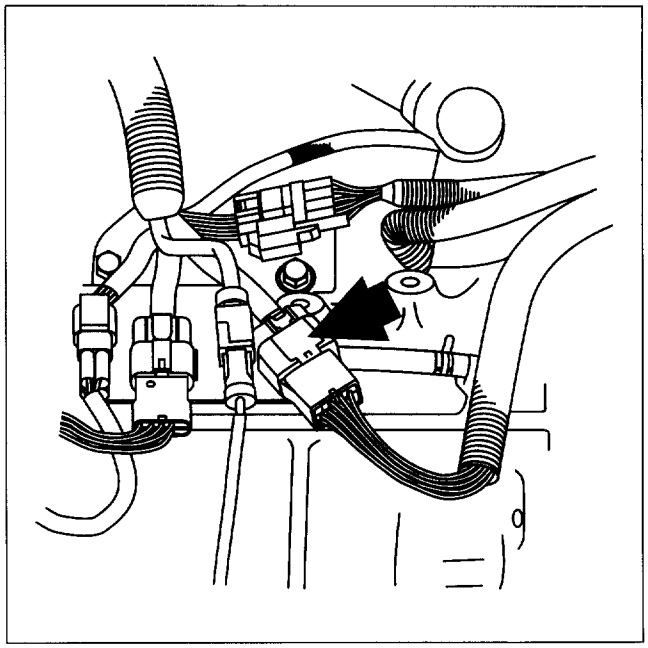

Figure 11. Harness Connector Location

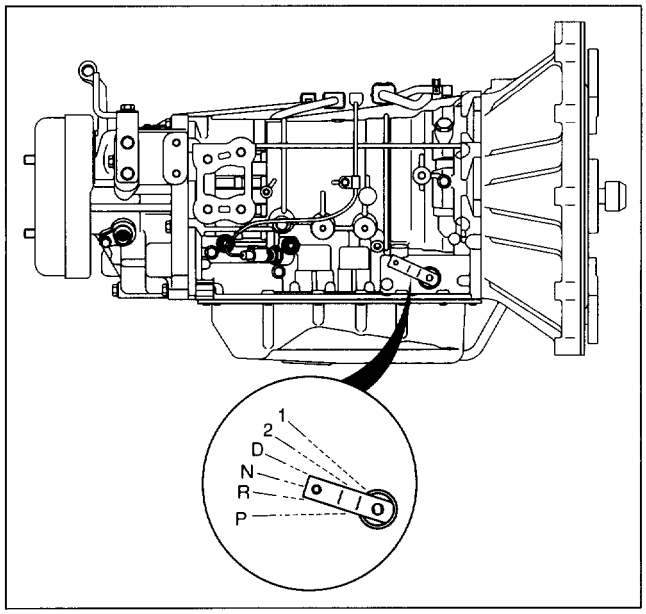

Figure 12. Moving Select Lever

Remove or Disconnect (Figure 13)

1. Nut retainer.
2. Loosen the nut.
3. Remove the inhibitor switch bolts.
4. Inhibitor switch from the transmission.

Install or Connect (Figures 13 and 14)

1. Place the select lever in the "N" range.
2. Assemble the inhibitor switch to the end of the shaft (A).

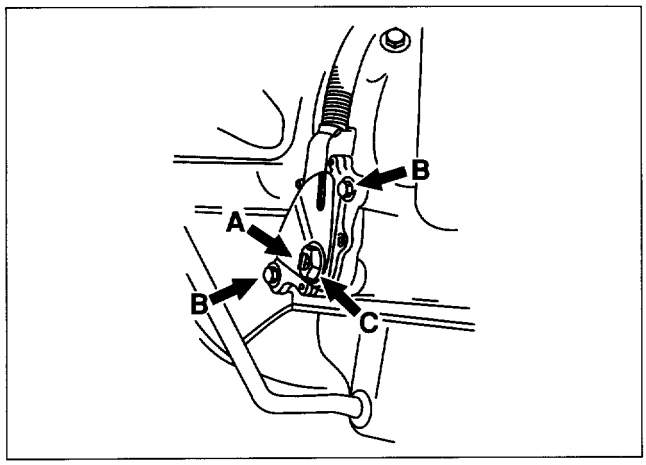

Figure 13. Inhibitor Switch

3. Temporarily tighten the inhibitor switch bolts (B).
4. Tighten the nut (C).

Tighten

- Inhibitor switch nut 7 N·m (0.7 kg·m / 61 lb·in)

5. Loosen the two temporarily tightened bolts and move the inhibitor switch as necessary to align the reference line (D) with the groove (E).

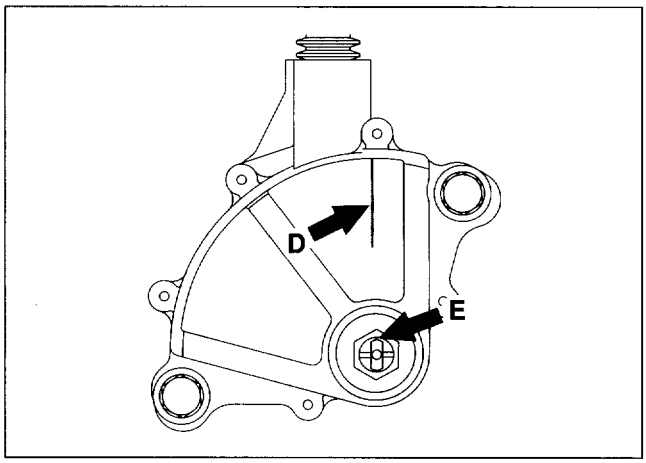

Figure 14. Adjusting Inhibitor Switch

6. Steadying the inhibitor switch with one hand, tighten the two bolts.

Tighten

- Inhibitor switch bolts 12.5 N·m (1.25 kg·m / 109 lb·in)

7. Bend the nut retainer of the inhibitor switch at two places.

VEHICLE SPEED SENSOR-2

Vehicle speed sensor-2 is attached on the speedometer driven gear assembly.

Inspect (Figure 15)

1. Block the wheels.
2. Disconnect the negative battery cable.
3. Disconnect the harness connector from vehicle speed sensor 2.
4. Connect the vehicle speed sensor connector terminal (1) to the battery (+) terminal and terminal (2) to the battery (-) terminal.
5. Connect a resistance of 1.3 kΩ to 1.5 kΩ (1.4 W or more) between terminals (1) and (3).

   CAUTION: Be extremely careful not to connect the battery (+) terminal to the vehicle speed sensor terminal(3).
   This may damage the vehicle speed sensor.

6. Rotate the shaft of the vehicle speed sensor slowly and measure the voltage at both ends with a digital voltmeter.

   Measure

   - The voltage, with one rotation of vehicle speed sensor shaft, fluctuates four times in the following range: 10 to 14 V ◄► 2V or less.

7. Replace the sensor when the result of inspection is found abnormal.

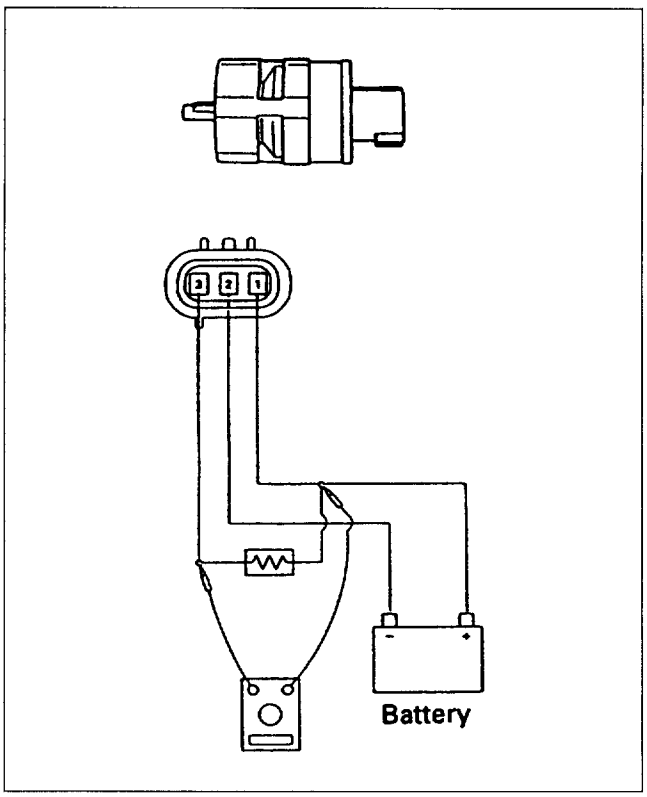

Figure 15. Vehicle Speed Sensor-2

Remove or Disconnect

1. Remove cover and clip.
2. Harness connector.
3. Vehicle speed sensor with key rod.

Install or Connect

1. Vehicle speed sensor with key rod.

   Tighten

   - Vehicle speed sensor 27 N·m (2.8 kg·m / 20 lb·ft)

2. Harness connector.
3. Cover and clip.
4. Negative battery cable.
5. Remove wheel blocks.

VEHICLE SPEED SENSOR-1

The vehicle speed sensor-1 is attached on the transmission rear cover (figure 17).

Inspect (Figure 16)

1. Block the wheels.
2. Disconnect the negative battery cable.
3. Disconnect the harness connector.
4. Use a ohmmeter to measure the resistance between terminals (1) and (2).

Measure

- Resistance 560 – 680 Ω at approx. 20°C (68°F)

5. If the measured value is outside the specified range, the vehicle speed sensor-1 must be replaced.

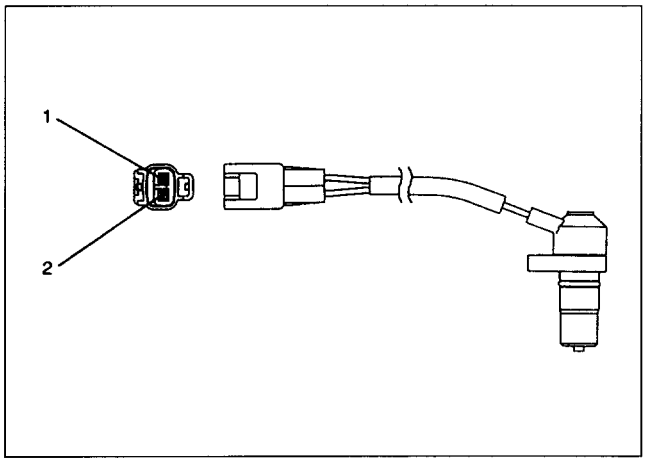

Figure 16. Vehicle Speed Sensor-1

Remove or Disconnect (Figure 17)

1. Support transmission with a transmission jack.
2. Remove the mount bolt (8 pcs) from the crossmember. Then lower the transmission assembly slightly.
3. Harness connector.
4. Fixing screw.
5. Vehicle speed sensor 2 from transmission rear cover.

Install or Connect (Figure 17)

1. Apply grease to the new O-ring then attach to the vehicle speed sensor.
2. Vehicle speed sensor to the rear cover.
3. Fixing screw.

Tighten

- Vehicle speed sensor screw 8 N·m (0.8 kg·m / 69 lb·in)

4. Harness connector.
5. Raise the transmission jack and install mount bolt.
6. Negative battery cable.
7. Remove the wheel blocks.

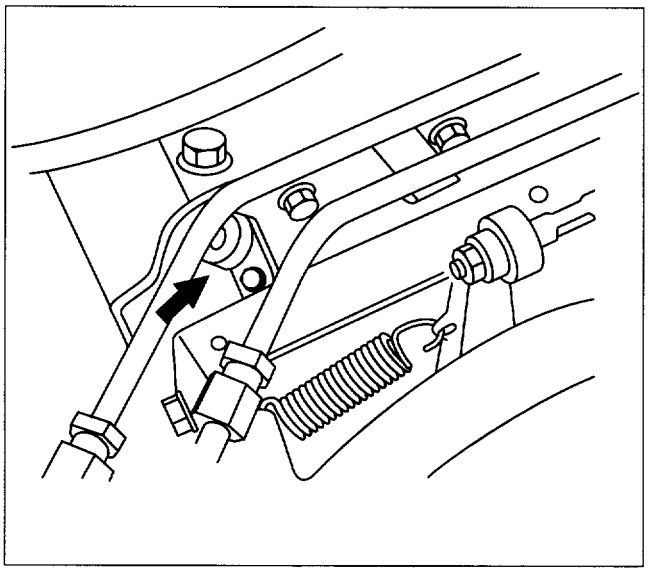

Figure 17. Vehicle Speed Sensor-1

AUTOMATIC TRANSMISSION FLUID (ATF) TEMPERATURE SWITCH

The ATF temperature switch fitted to the right side of the transmission (figure 18).

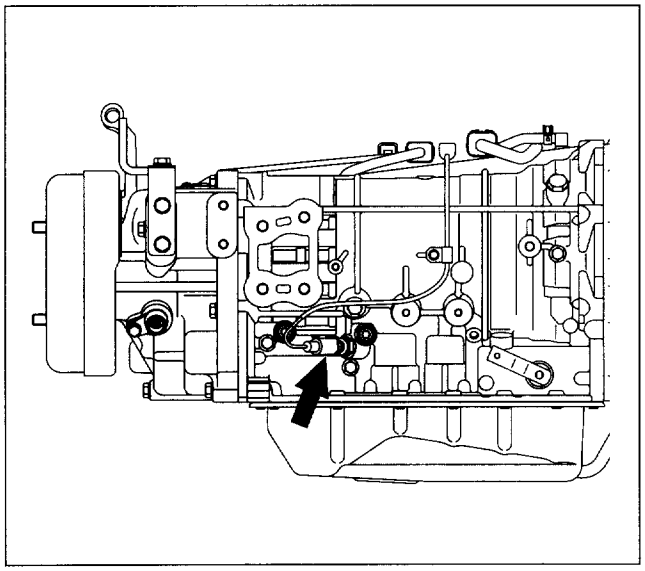

Figure 18. ATF Temperature Switch

Remove or Disconnect (Figure 18)

1. Harness connector and harness clip.
2. ATF temperature switch.

Inspect (Figure 19 and 20)

1. Heat ATF in a container and place the ATF temperature switch.
2. Check the electrical continuity between the switch terminal and the switch body.

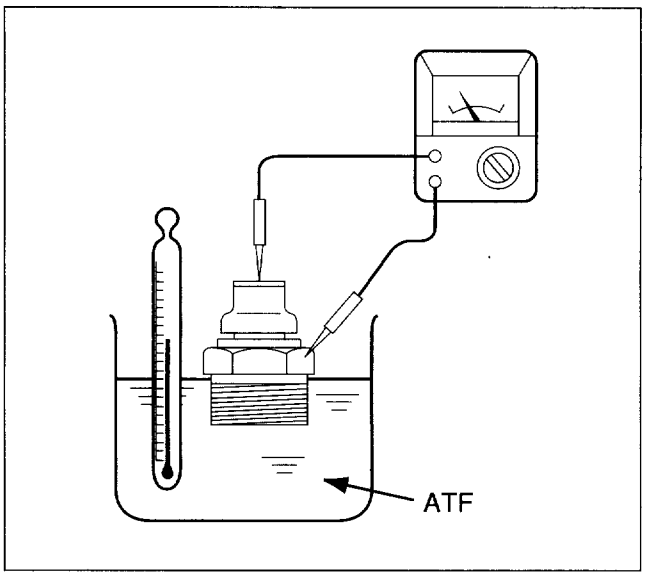

Figure 19. Testing the ATF Temperature Switch

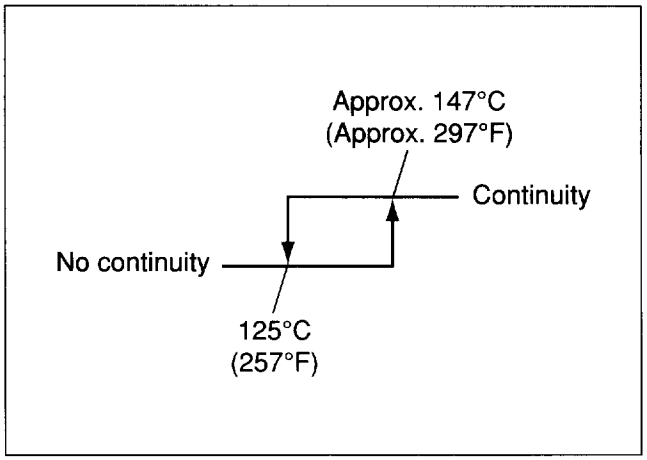

Figure 20. Continuity of the ATF Temperature Switch

Install or Connect (Figure 18)

1. ATF temperature switch.

   Tighten

   - ATF temperature switch 25 N·m (2.6 kg·m / 18 lb·ft)

2. Harness connector and harness clip.

ENGINE SPEED SENSOR

The engine speed sensor attached to left side of the flywheel housing (figure 21).

Inspect (Figure 22)

1. Block the wheels.
2. Disconnect the negative battery cable.
3. Use a ohmmeter to measure the resistance between terminal (1) and (2).

Measure

- Resistance 670 – 1000 Ω

4. Replace the sensor when the result of inspection is found abnormal.

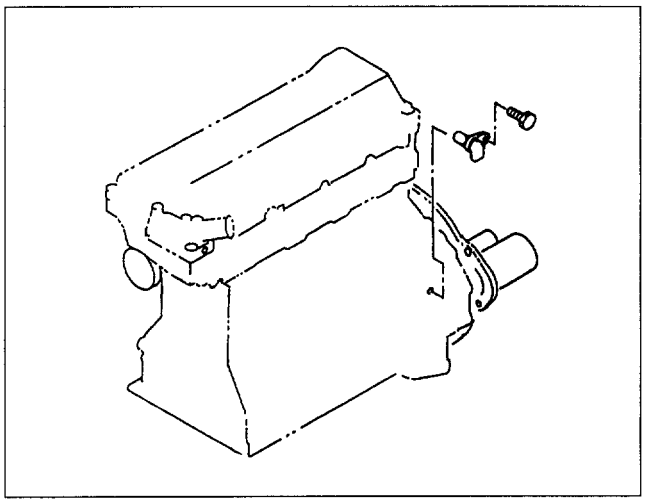

Figure 21. Engine Speed Sensor Location

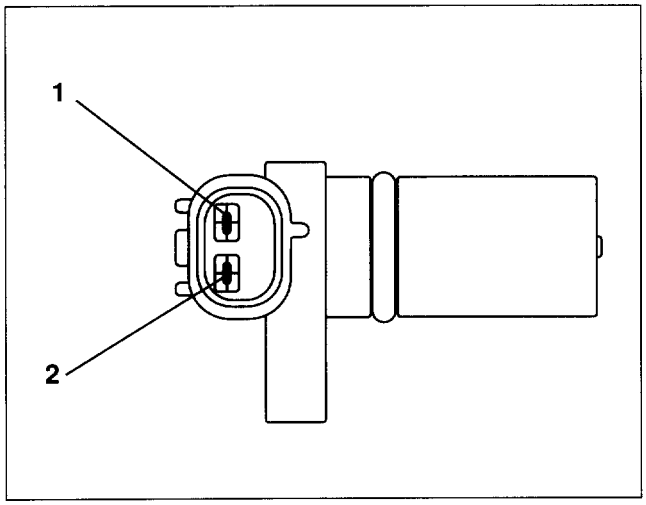

Figure 22. Engine Speed Sensor

Remove or Disconnect

1. Harness connector.
2. Engine speed sensor.

Install or Connect

1. Engine speed sensor.

Tighten

- Engine speed sensor 8 N·m (0.8 kg·m / 69 lb·in)

2. Harness connector.
3. Negative battery cable.
4. Remove wheel blocks.

OVERDRIVE OFF SWITCH

LHD model :

Inspect (Figure 23-A)

1. Block the wheels.
2. Disconnect the negative battery cable.
3. Remove the select lever cover
4. Disconnect the harness connector
5. Check continuity between terminals (3) and (4).
6. Replace the overdrive off switch when the result of inspection is found abnormal.
7. Connect the harness connector.
8. Connect negative battery cable.
9. Remove wheel blocks.

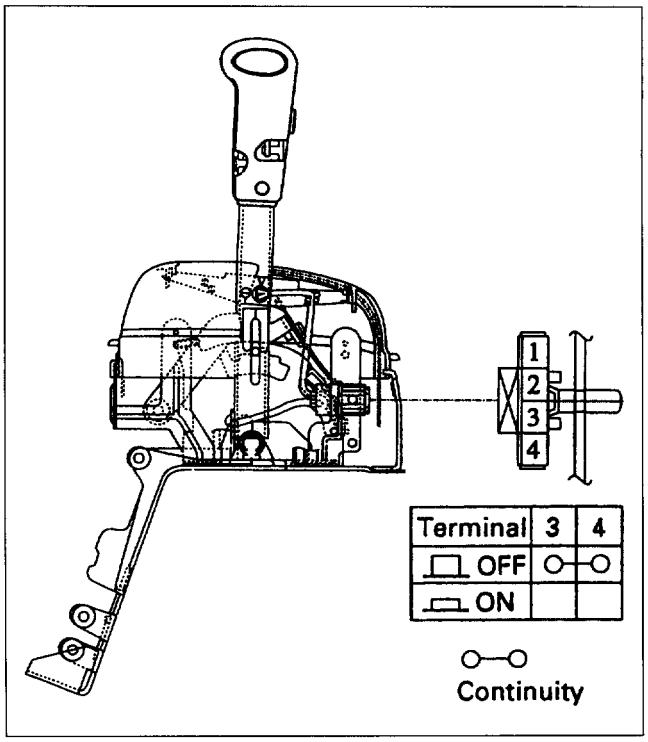

Figure 23-A. Overdrive OFF switch (LHD model)

RHD model :

Inspect (Figure 23-B)

1. Block the wheels.
2. Disconnect the negative battery cable.
3. Remove the select lever cover.
4. Disconnect the harness connector.
5. Check continuity between terminals (9) and (10).
6. Replace the overdrive off switch when the result of inspection is found abnormal.
7. Connect the harness connector.
8. Install the select lever cover.
9. Connect negative battery cable.
10. Remove wheel blocks.

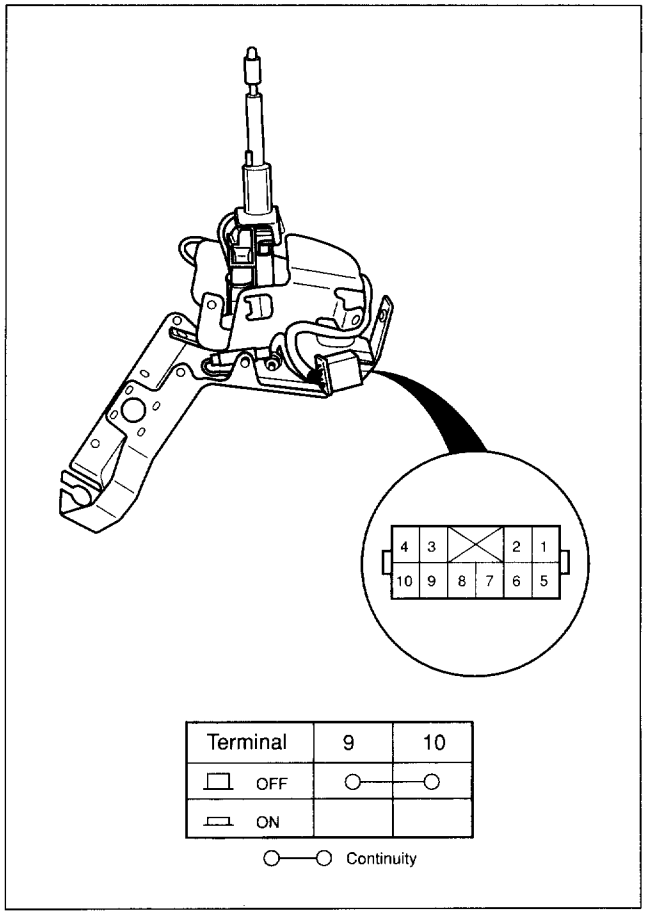

Figure 23-B. Overdrive OFF switch (RHD model)

OIL PAN

Remove or Disconnect

Tool Required:
5-8840-2153-0 Oil Pan Seal Cutter

1. Block the wheels.
2. Negative battery cable.
3. Raise vehicle and support with suitable safety stands.
4. Drain the Automatic Transmission Fluid (ATF). Refer to "ATF CHANGE" previously in this section.
5. Remove the oil pan bolts (20 pcs). Leave several bolts attached (2-3 pitch).
6. Insert an oil pan seal cutter from a corner of the oil pan and separate the oil pan (figure 24).

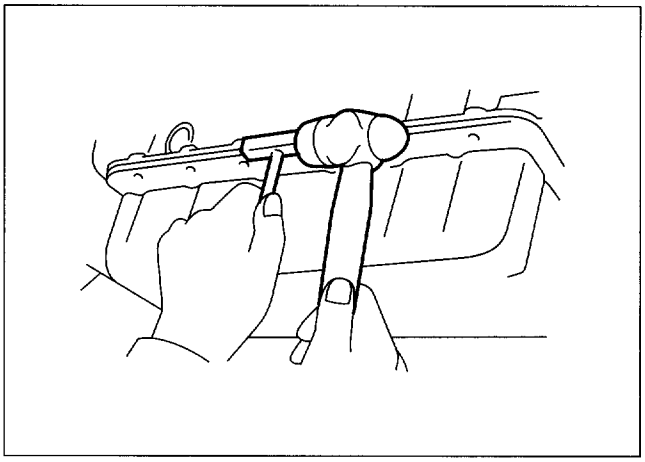

Figure 24. Oil Pan Seal Cutter

CAUTION:
Drive the oil pan cutter carefully. Do not deform the oil pan.
The oil pan cannot be emptied completely. Do not tilt.

Install or Connect

1. Clean the oil cleaner magnet and set it to the oil pan (figure 25).

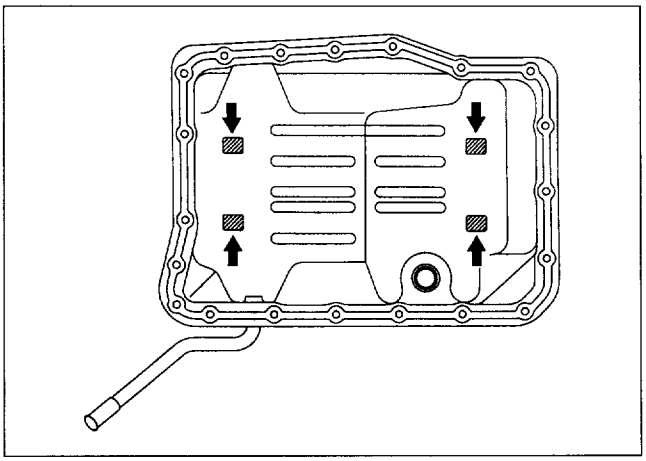

Figure 25. Magnet

2. Remove the sealant in the contact surface between the transmission case and the oil pan.

   CAUTION: Work carefully to keep the contact surface between the transmission case and the oil pan free of ATF.

3. Apply sealant (ThreeBond 1281B or equivalent) and attach the oil pan to the transmission case.

   CAUTION: The sealant must be 2-3 mm (0.03-0.12 in.) diameter without interruption. Assemble the oil pan within 10 minutes after the sealant is applied (figure 26).

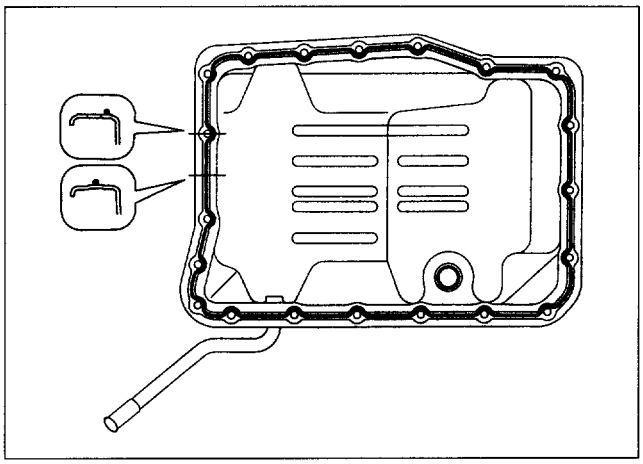

Figure 26. Sealant

4. Oil pan to the transmission case and tighten the oil pan bolts.

   Tighten

   - Oil pan bolts 7 N·m (0.7 kg·m / 61 lb·in)
   - Drain plug 27 N·m (2.8 kg·m / 20 lb·ft)

   CAUTION: Tighten the bolts evenly in several times.

5. Refill the transmission with new ATF. Refer to "ATF CHANGE".
6. Negative battery cable.
7. Remove safety stands.
8. Remove wheel blocks.

OIL FILLER TUBE

Remove or Disconnect (Figure 27)

1. Block the wheels.
2. Negative battery cable.
3. Remove the oil level gauge.
4. Remove the nut from bracket, then remove the oil filler tube with O-ring.

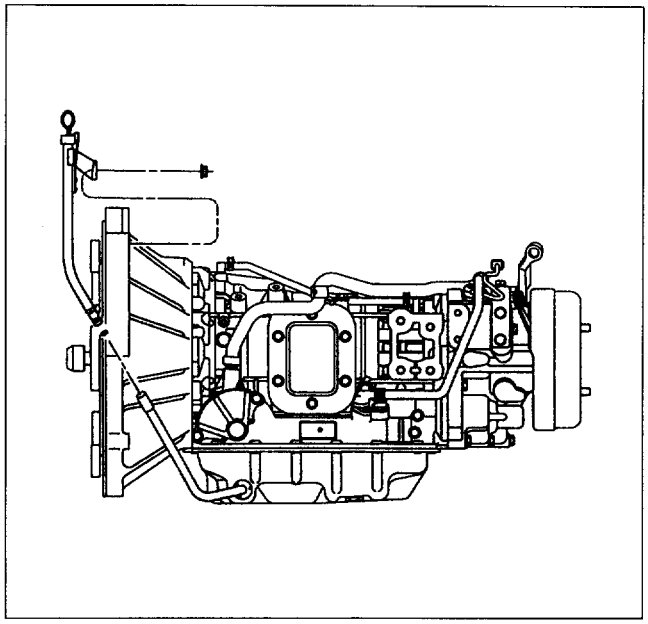

Figure 27. Oil Filler Tube

Install or Connect (Figure 27)

1. Oil filler tube with O-ring.

   Tighten

   - Oil filler tube nut 47 N·m (4.8 kg·m / 35 lb·ft)

2. Install level gauge.
3. Negative battery cable.
4. Remove wheel blocks.

OIL STRAINER

Remove or Disconnect (Figure 28)

1. Block the wheels.
2. Negative battery cable.
3. Raise vehicle and support with suitable safety stands.
4. Oil pan.
   Refer to "OIL PAN" previously in this section.
5. Oil strainer bolts (4 pcs), and then oil strainer.

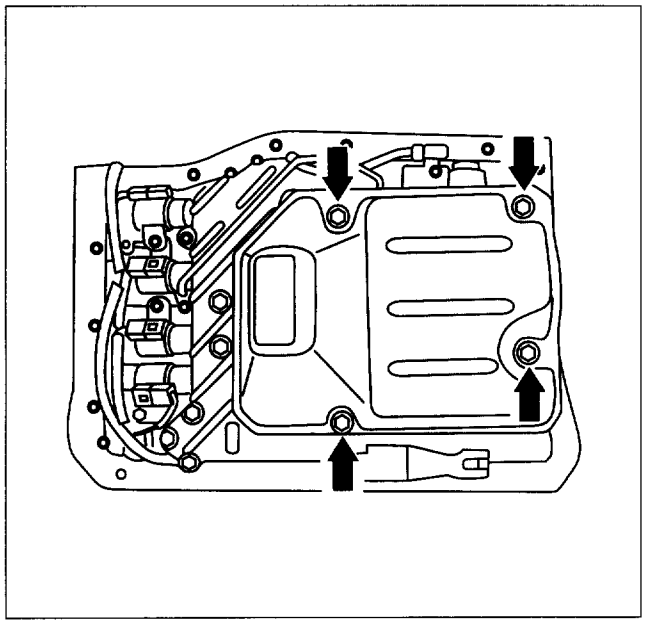

Figure 28. Oil Strainer

Inspect

Check oil pan bottom and oil strainer mesh for foreign substances (facing of clutches and metal flakes, etc.).

Install or Connect (Figure 28)

1. Oil strainer.

   Tighten

   - Oil strainer bolts 10 N·m (1.0 kg·m / 87 lb·in)

2. Oil pan.
   Refer to "OIL PAN" previously in this section.
3. Negative battery cable.
4. Remove safety stands.
5. Remove wheel blocks.

SOLENOIDS

Inspect

1. Block the wheels.
2. Disconnect the negative battery cable.
3. Oil pan.
   Refer to "OIL PAN" previously in this section.
4. Disconnect the connectors from the solenoids.
   Use the ohmmeter to measure the resistance of each solenoid.

   Measure

Solenoid	Resistance (Ω) (at approx. 20°C/68°F)
Timing solenoid	11 - 15
No. 1 Shift solenoid	
No. 2 Shift solenoid	
Lock-up solenoid	
Line pressure solenoid	3.7—4.1

Remove or Disconnect (Figure 29)

1. Loosen the bolts and remove the solenoids.

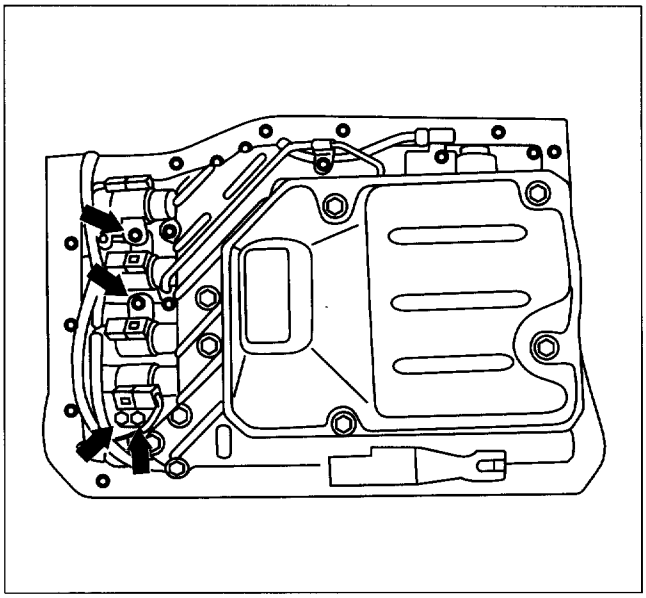

Figure 29. Solenoids

Install or Connect (Figure 29)

1. Install solenoids and tighten the bolts.

   Tighten

   - Solenoid bolts 10 N·m (1.0 kg·m / 87 lb·in)

REAR COVER OIL SEAL

Remove or Disconnect (Figure 30)

Tool Required:
5-8840-0027-0 Rear Oil Seal Remover
5-8840-0019-0 Sliding Hammer

1. Block the wheels.
2. Negative battery cable.
3. Raise vehicle and support with suitable safety stands.
4. Reference mark the flange yoke to the parking brake drum.
5. Propeller shaft.
7. Lock nut.
   Make sure to raise the caulking of the lock nut. Apply the parking brake or move the select lever to the "P" range to prevent the output shaft from turning.
8. Remove the O-ring using a screwdriver.
9. Release the parking brake and remove the parking brake drum.
10. Drive coupling from output shaft.
11. Remove parking brake assembly.
11. Remove the oil seal using oil seal remover.

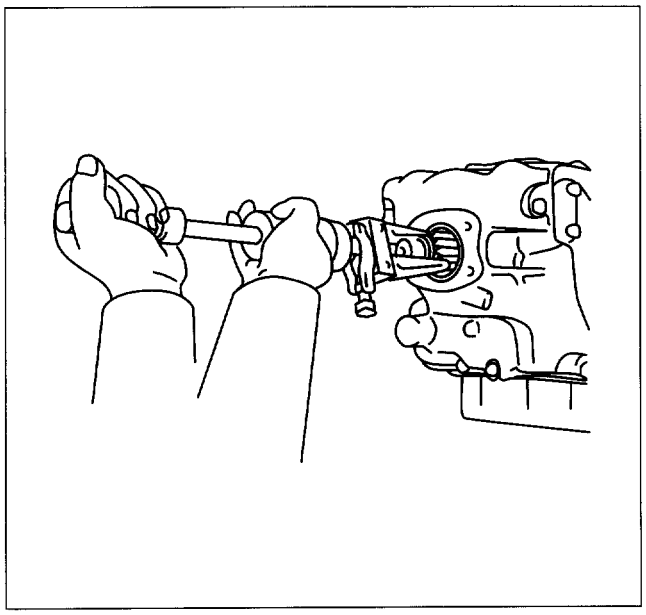

Figure 30. Rear Cover Oil Seal Removal

Install or Connect

Tool Required:
5-8840-2345-0 Rear Oil Seal Installer

1. Apply grease to the new oil seal lip.
2. Drive the oil seal to the rear cover end surface using oil seal installer (figure 31).

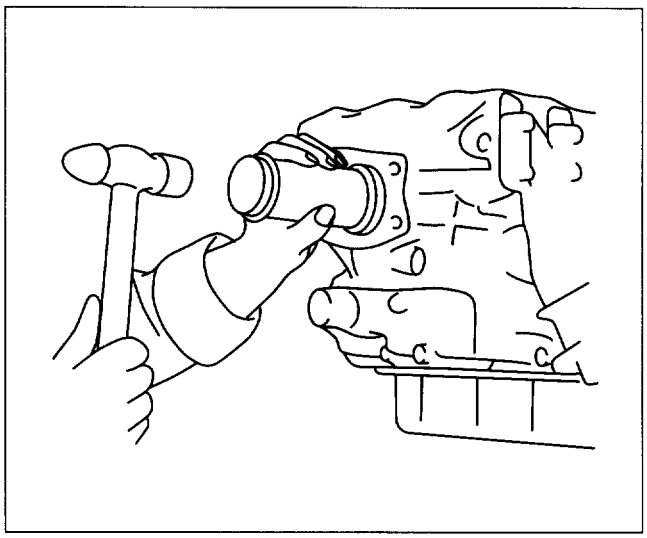

Figure 31. Rear Cover Oil Seal Installation

CAUTION: Drive the oil seal evenly.
Take care not to damage or deform the oil seal.

3. Parking brake assembly.

Tighten

- Parking brake bolts 83 N·m (8.5 kg·m / 61 lb·ft)

4. Drive coupling to the output shaft.

CAUTION: Take care not to damage the oil seal lip .

5. Apply the parking brake or move the select lever to the "P" range to prevent the output shaft from turning.
6. New O-ring and new lock nut.

Tighten

- Driver coupling nut 170 N·m (17.3 kg·m / 125 lb·ft)

CAUTION: Always install a new lock nut. Never reuse the original coupling nut.

- Stake nut by chisel (figure 32).

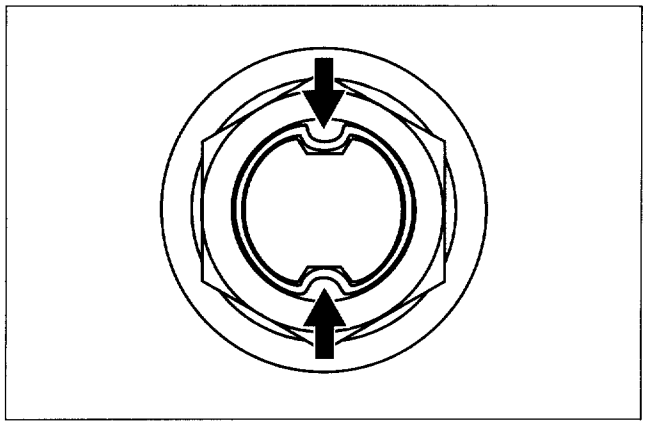

Figure 32. Lock Nut

7. Parking brake drum.
8. Line up reference mark and install propeller shaft to the driver coupling.

Tighten

- Propeller shaft nuts 102 N·m (10.4 kg·m / 75 lb·ft)

9. Negative battery cable.
10. Remove safety stands.
11. Remove wheel blocks.

VEHICLE SPEED (SPEEDOMETER) SENSOR DRIVEN GEAR

Remove or Disconnect (Figures 33 and 34)

1. Block the wheels.
2. Negative battery cable.
3. Raise vehicle and support with suitable safety stands.
4. Harness clip (1) and protector (2).

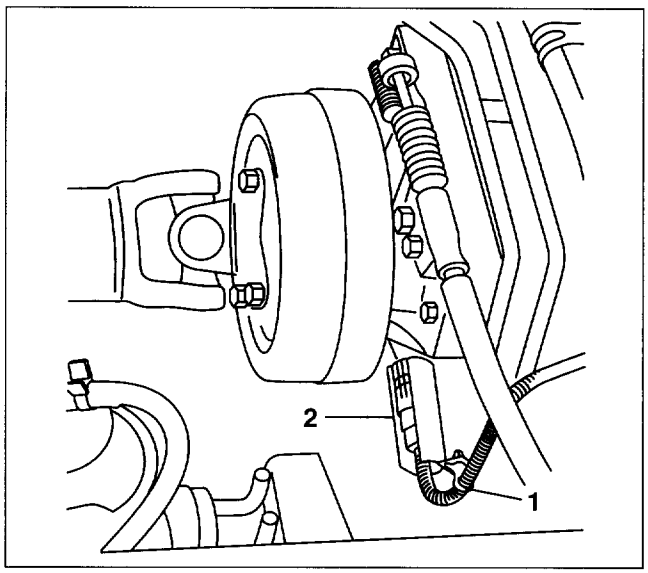

Figure 33. Vehicle Speed Sensor Connector

5. Wiring connector.
6. Vehicle speed sensor (3) with key rod.
7. Fixing bolt (4) and plate (5).
8. Driven gear assembly (6).
9. Remove clip (7) and disassemble driven gear assembly.

Install or Connect (Figures 33 and 34)

1. Driven gear assembly (6).
2. Install clip (7).
3. Plate (5) and fixing bolt (4).

Tighten

- Driven gear fixing bolt 12.5 N·m (1.25 kg·m / 109 lb·in)

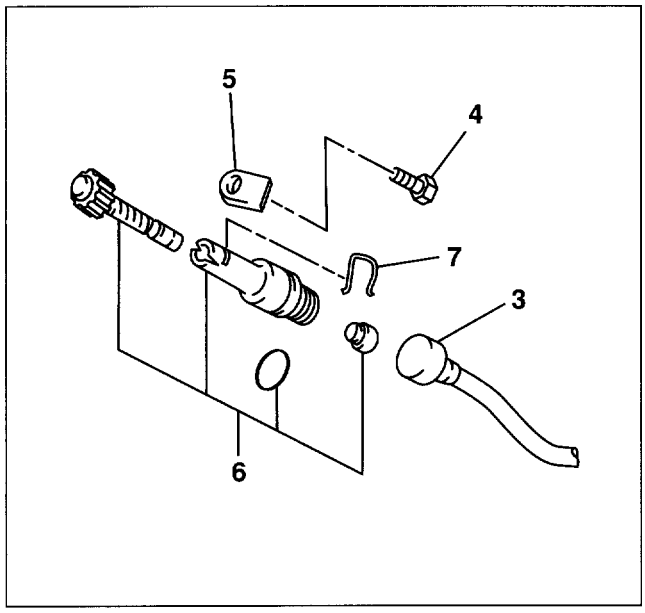

Figure 34. Vehicle Speed Sensor and Driven Gear Assembly

4. Vehicle speed sensor (3) with key rod.

Tighten

- Vehicle speed sensor 27 N·m (2.8 kg·m / 20 lb·ft)

5. Wiring connector.
6. Protector (2) and harness clip (1).
7. Negative battery cable.
8. Remove safety stands.
9. Remove wheel blocks.

CONTROL LEVER ASSEMBLY

Remove or Disconnect (Figure 35)

1. Block the wheels.
2. Negative battery cable.
3. Raise vehicle and support with suitable safety stands.
4. Control lever cover (1).
5. Harness connector (2).
6. Control cable (3) from control lever assembly .
7. Bolts (4) and nuts (5)
8. Control lever assembly (6).

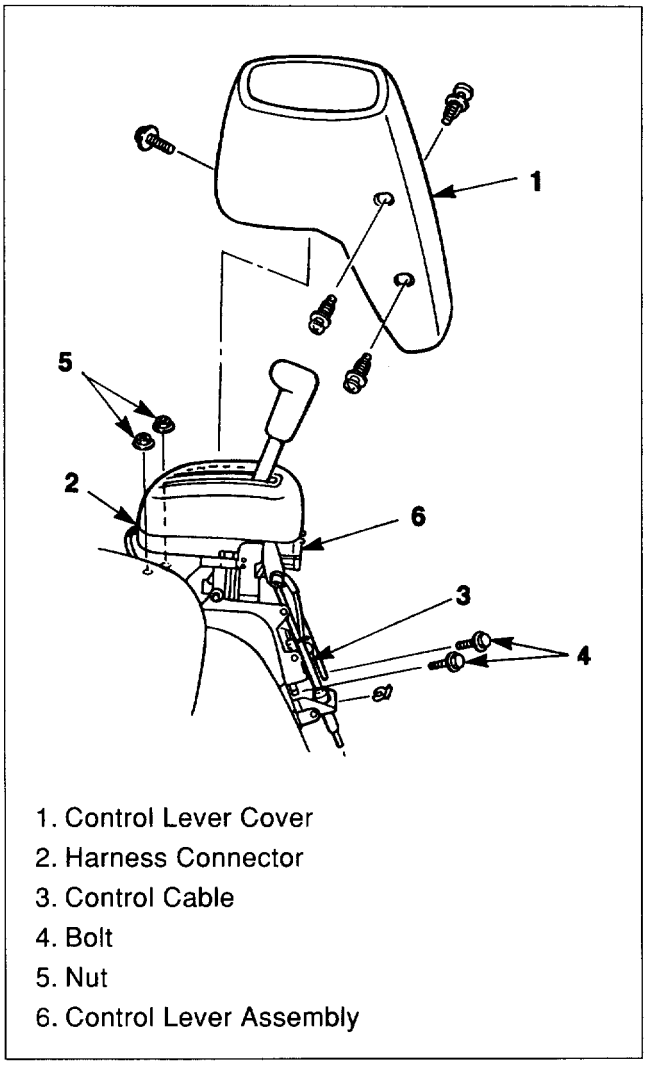

1. Control Lever Cover
2. Harness Connector
3. Control Cable
4. Bolt
5. Nut
6. Control Lever Assembly

Figure 35. Control Lever Assembly

Install or Connect (Figure 35)

1. Control lever assembly (6).
2. Bolts (4) and nut (5).
3. Control cable (3) to the control lever assembly.

Adjust

- When connecting the control cable to the select lever, adjust the cable.
  Refer to "CONTROL CABLE" later in this section.

4. Harness connector (2).
5. Control lever cover (1).
6. Negative battery cable.
7. Remove safety stands.
8. Remove wheel blocks.

CONTROL CABLE

Check that the each control lever position matches the corresponding shift indicators ("P", "R", "N", "D", "2" and "1").
If the control lever positions and shift indicators do not match, the control cable must be adjusted.

Adjust (Figure 37)

- Disconnect the negative battery cable.
- Apply parking brake.

1. Remove the retaining pin.
2. Remove the cable rod and washer.
3. Put the control lever in the "N" position.
4. Put the transmission in the "N" range.
5. Move the control lever towards the "R" position until a slight resistance is felt.
   Do not move the lever fully into the "R" position.
6. Loosen the cable lock nuts.
7. Adjust the cable rod length by rotating the turn buckle.
8. Tighten the lock nuts.
9. Install the cable rod and washer to the control lever.
10. Install the new retaining pin
    - Install the negative battery cable.

Remove or Disconnect (Figures 36, 37 and 38)

- Disconnect the negative battery cable.
- Apply parking brake.

1. Remove the retaining pin.
2. Remove the cable rod and washer.
3. Remove the cable from rear bracket.
4. Remove the control lever cover.
5. Remove the clip.
6. Remove the snap pin and washer.
7. Remove the cable rod.
8. Remove the grommet assembly.
9. Remove the cable from the bracket.
10. Remove the clip bands.
11. Cable assembly.

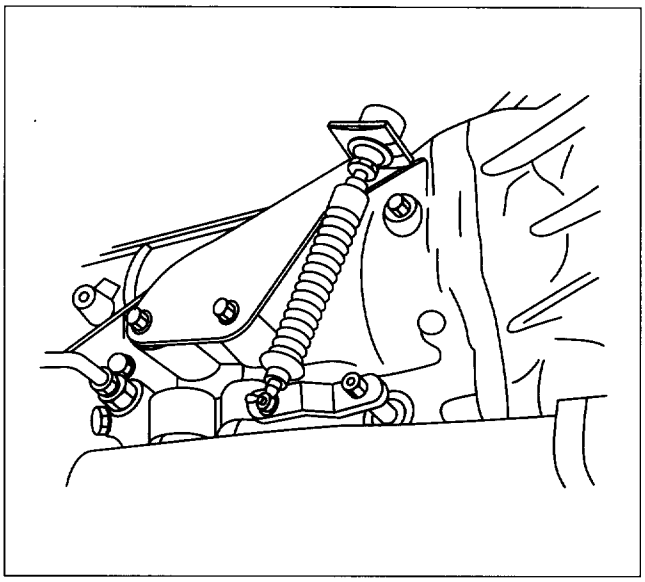

Figure 36. Control Cable (Transmission Side)

Install or Connect (Figures 36, 37 and 38)

1. Install temporarily the control cable.

Important

- Never bend the cable to radius less than 450 mm (18 in) unless it is necessary to do so for wiring purposes. And never bend the cable to radius less than 180 mm (7 in) even during wiring.
- Install the cable carefully without unnecessary twisting of the cable boots.

2. Cable rod and washer to control lever.
3. New snap pin.
4. Cable to front bracket.
5. Clip.
6. Control lever cover.

7. Grommet assembly.
8. Put the control lever in the "N" position.
9. Put the transmission in "N" range.
10. Cable to rear bracket.
11. Clip.
12. Cable rod and washer to shift lever.
13. Clip bands.
    - Adjust the control cable.
    - Negative battery cable.

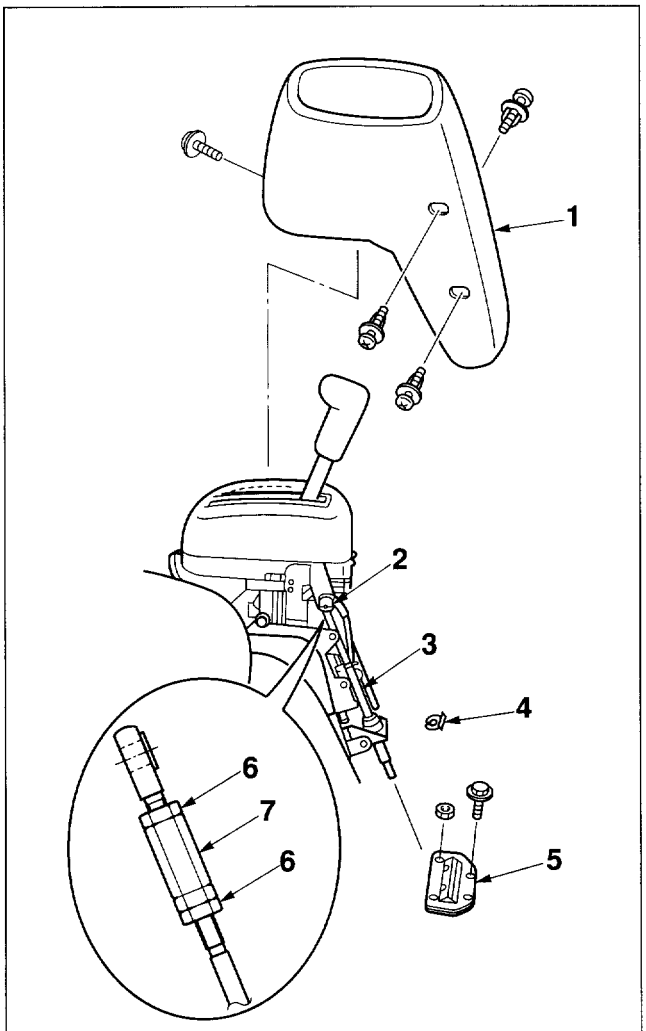

1. Control Lever Cover
2. Retaining Pin
3. Control Cable
4. Clip
5. Grommet Assembly
6. Lock Nuts
7. Turn Buckle

Figure 37. Control Cable (Cab Side)

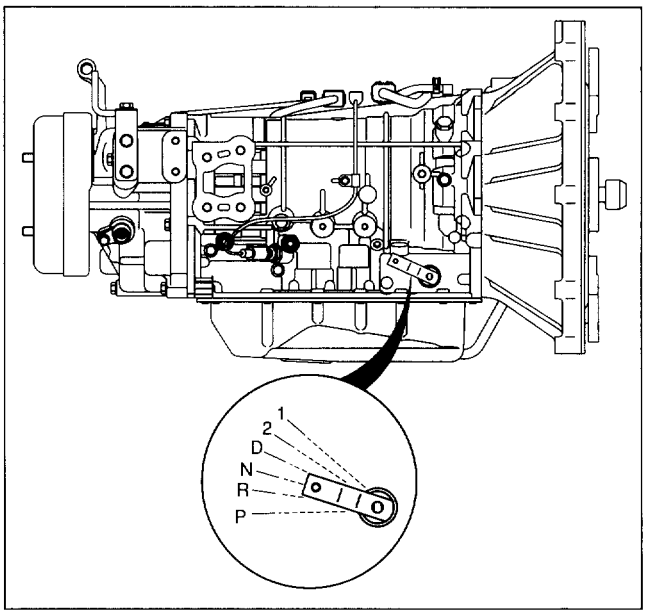

Figure 38. Shift Positions

TRANSMISSION ASSEMBLY

Remove or Disconnect (Figures 37, 38, 39, and 40)

1. Block the wheels.
2. Negative battery cable.
3. Raise vehicle and support with suitable safety stands.
4. Tilt the cab.
5. Oil filler tube with bracket.
6. Propeller shaft guard.
7. Center bearing bracket (If equipped).
8. Reference mark (2) the flange yoke (3) to the parking brake drum (4).

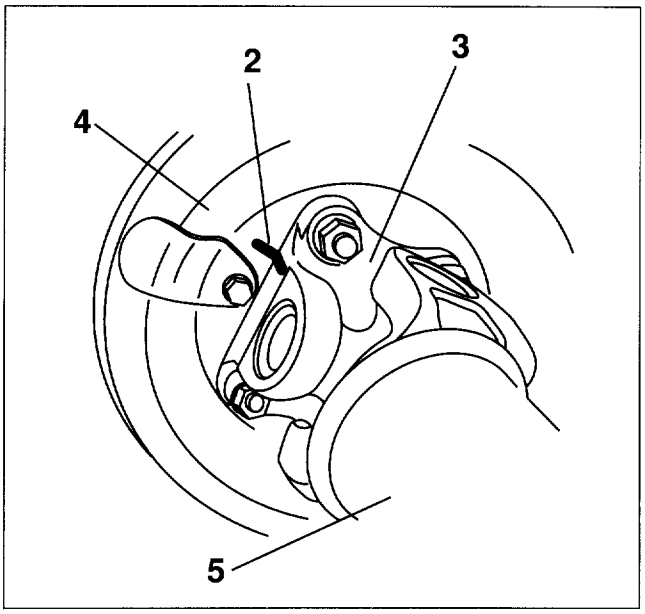

Figure 37. Propeller Shaft

9. Propeller shaft (5).
10. Starter assembly. Wire the starter assembly to frame.
11. Parking brake cable with bracket (figure 38).

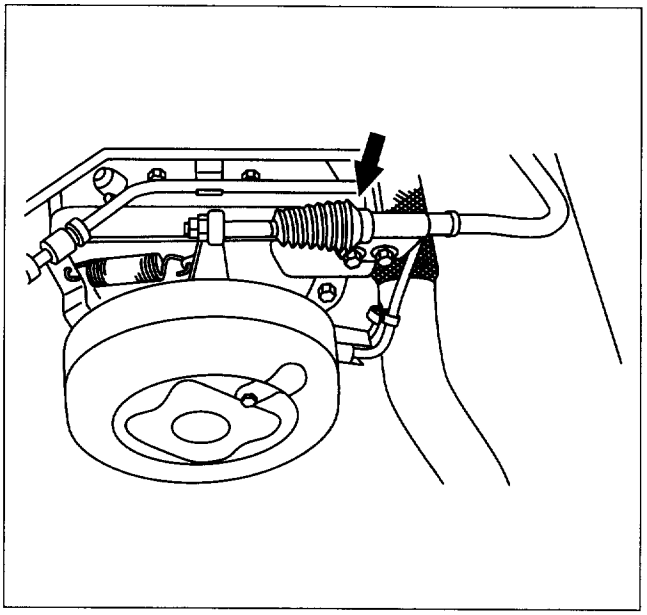

Figure 38. Parking Brake Cable

12. Harness connectors (figure 39).
    Remove the harness connector bracket (1) on the transmission. Then disconnect four connectors (inhibitor switch, solenoid, vehicle speed sensor 2 and ATF temperature switch).

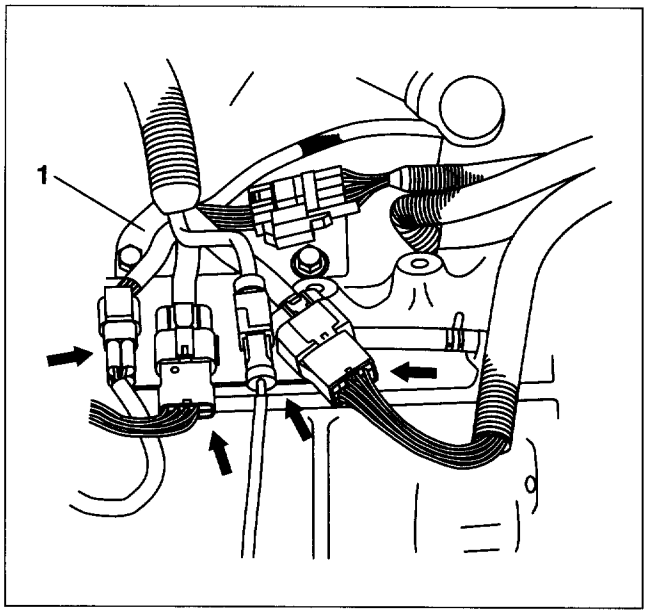

Figure 39. Harness Connector

13. Vehicle speed sensor 1.
14. Disconnect transmission fluid cooler lines above the transmission.
15. Control cable with bracket from transmission.
16. Exhaust pipe bracket.
17. Under cover from converter housing (figure 40).
18. Torque converter bolts (6pcs).

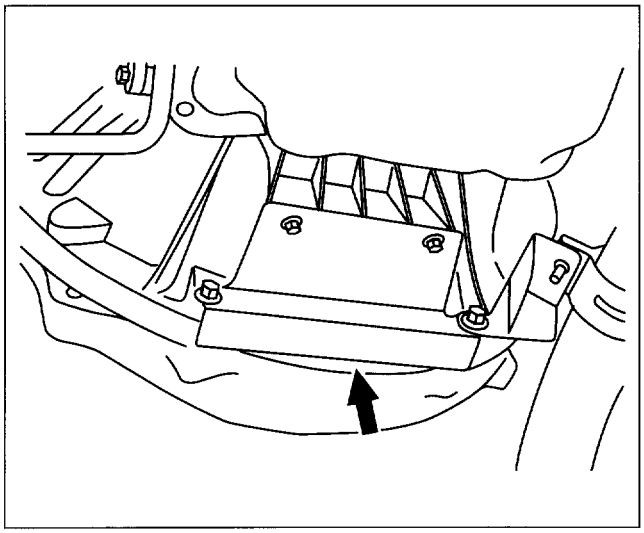

Figure 40. Under Cover

19. Support the transmission with a transmission jack.
20. Attach a lifting cable/chain to the engine.
21. Operate the hoist to slightly raise the engine and support it.
22. Torque converter housing to flywheel housing bolts.
23. Operate the hoist to slowly lower the engine. Hold the front end of the transmission higher than the rear end of the transmission. This will prevent the torque converter from falling from the transmission.
24. Lower the transmission jack.

Install or Connect (Figures 37, 38, 39, and 40)

1. Set the transmission assembly on a transmission jack.
   - Hold the front end of the transmission higher than the rear end of the transmission.
   - This will prevent the torque converter from falling from the transmission.
2. Transmission to the flywheel housing.

   Tighten

   - Torque converter housing to flywheel housing fixing bolts 40 N·m (4.1 kg·m / 30 lb·ft).

3. Operate the hoist to slowly raise the engine and transmission assembly.
4. Torque converter to the flywheel.
   - By turning the flywheel.

   Tighten

   - Torque converter bolts 40 N·m (4.1 kg·m / 30 lb·ft)

   NOTICE: Discard used bolts and install new ones.

6. Under cover (figure 40).

   Tighten

   - Under cover bolt 9 N·m (0.9 kg·m / 78 lb·in)

7. Exhaust pipe bracket.
8. Control cable and bracket to the transmission.
9. Adjust control cable.
   - Refer to "CONTROL CABLE" previously in this section.
10. Transmission fluid cooler line.

    Tighten

    - Cooler line joint connector 34 N·m (3.5 kg·m / 25lb·ft)

11. Vehicle speed sensor 1.
12. Harness connectors and bracket (figure 39).
13. Parking brake cable (figure 38). Adjust parking brake cable.
14. Starter assembly.
15. Propeller shaft to the driver coupling.
    - Line up reference mark (figure 37).

    Tighten

    - Propeller shaft bolts 102 N·m (10.4 kg·m / 75 lb·ft)

16. Center Bearing Bracket (If equipped).

Tighten

- Center bearing bracket bolts 40 N·m (4.1 kg·m / 30 lb·ft)

17. Propeller shaft guard.
18. Oil filler tube with bracket.
19. Negative battery cable.
20. Remove safety stands.
21. Remove wheel blocks.

TORQUE CONVERTER

Remove or Disconnect

1. Remove the transmission assembly from the vehicle.
2. Remove the torque converter from the torque converter housing.

Inspect

Whenever the transmission is replaced, inspect the torque converter and replace it if any of the following conditions exists:

- Line pressure is normal but a stalling test fails (idle in "D" or "R" range).
- Metallic sound is heard from the torque converter during a stall test or when in "N" range.
- The torque converter center piece is deformed.
- The extension sleeve is rusty, has a large vertical scratch, or is worn excessively.
- Debris of paper, bearing or foreign materials is found from the ATF in the torque converter.
- Check the one-way clutch of the torque converter by using the special tools (figure 41).
  Tool Required:
  5-8840-2168-0 One-way Clutch Test Tool

1. Set the pilot nut in the test tool to the wrench. Insert the wrench to stator shaft fitting face of the torque converter.
2. Insert stator stopper through the sleeve in converter and set it to cutaway portion of the sleeve.
3. If both direction of the one-way clutch are free, or turns counterclockwise and locks clockwise, torque converter should be replaced.
   The normal one-way clutch turns clockwise and locks counterclockwise.

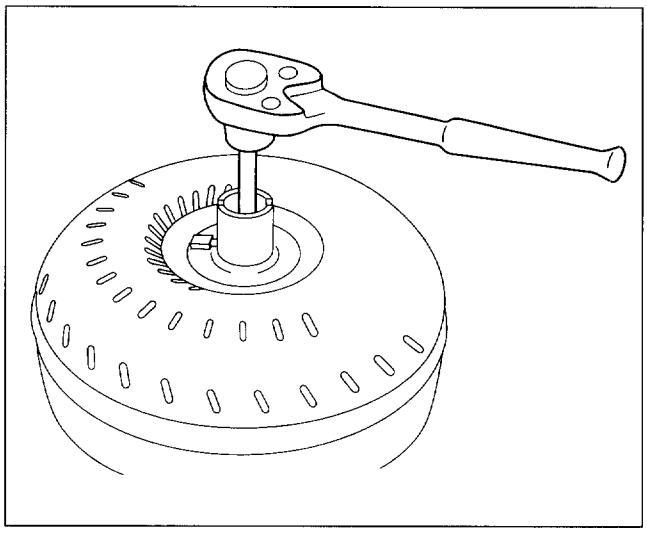

Figure 41. One-way Clutch Test

Install or Connect

1. Pour new ATF (approximately 2 liters) if a new torque converter is being installed.
2. Install the torque converter to the oil pump.
3. Measure the dimention A from the torque converter housing to the torque converter set block and confirm that the torque converter is inserted to the correct position (figure 42).

Measure

- Dimention A: 23.0 mm (0.91 in) or less

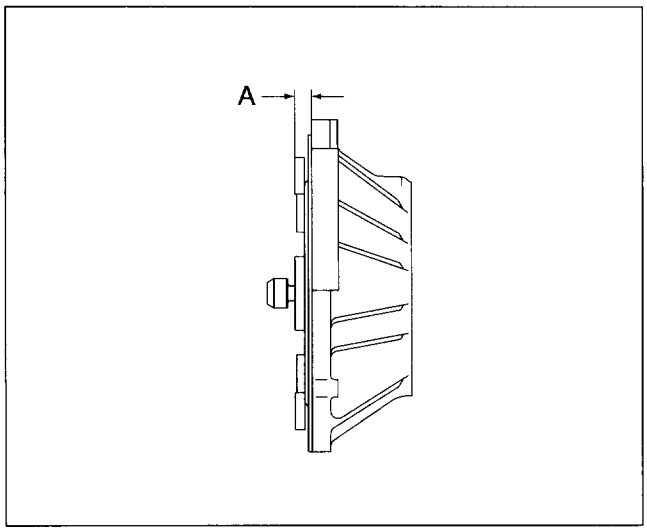

Figure 42. Torque Converter Installation Position

SPECIFICATIONS

AUTOMATIC TRANSMISSION

Torque Converter Set Dimention .....23.0 mm (0.91 in) or less

FASTENER TORQUES

Oil Pan Bolt .....7 N·m (0.7 kg·m / 61 lb·ft)
Drain Plug.....27 N·m (2.8 kg·m / 20 lb·ft)
Inhibitor Switch Nut .....7 N·m (0.7 kg·m / 61 lb·ft)
Inhibitor Switch Bolt.....12.5 N·m (1.25 kg·m / 109 lb·ft)
Vehicle Speed Senser 2.....27 N·m (2.8 kg·m / 20 lb·ft)
Vehicle Speed Senser 1 Screw.....8 N·m (0.8 kg·m / 69 lb·ft)
ATF Temperature Switch .....25 N·m (2.5 kg·m / 28 lb·ft)
Oll Filler Tube Nut .....47 N·m (4.8 kg·m / 35 lb·ft)
Oil Strainer Bolts .....10 N·m (1.0 kg·m / 87 lb·ft)
Solenoid bolts.....10 N·m (1.0 kg·m / 87 lb·ft)
Driver Coupling Nut.....170 N·m (17.3 kg·m / 125 lb·ft)
Speed Meter Driven Gear Fixing Bolt.....12.5 N·m (1.25 kg·m / 109 lb·in)
Torque Converter Bolts .....40 N·m (4.1 kg·m / 30 lb·ft)
Under Cover Bolts.....9 N·m (0.9 kg·m / 78 lb·ft)
Cooler Line Joint Connectors.....34 N·m (3.5 kg·m / 25 lb·ft)

SPECIAL TOOLS

ILLUSTRATION	**TOOL NO.** TOOL NAME
	5-8840-2153-0 **(J-37228)** Oil Pan Seal Cutter
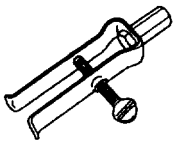	**5-8840-0027-0** **(J-26941)** Rear Oil Seal Remover
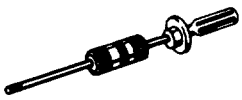	**5-8840-0019-0** **(J-23907)** Sliding Hammer
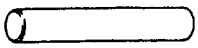	**5-8840-2345-0** **(J-41736)** Rear Oil Seal Installer
	5-8840-2168-0 **(J-35467)** One-way Clutch Test Tool

SECTION 7A4

AUTOMATIC TRANSMISSION OVERHAUL

CONTENTS

SUBJECT	PAGE
GENERAL REPAIR INSTRUCTION	7A4-2
COMPONENT PARTS REMOVAL	7A4-3
OIL PUMP	7A4-18
OVERDRIVE PLANETARY GEAR AND DIRECT CLUTCH	7A4-22
OVERDRIVE BRAKE	7A4-32
FRONT CLUTCH	7A4-38
REAR CLUTCH	7A4-45
SECOND BRAKE	7A4-51
PLANETARY GEARS, ONE-WAY CLUTCH AND OUTPUT SHAFT	7A4-58
FIRST AND REVERSE BRAKE	7A4-67
VALVE BODY	7A4-73
EXTENSION HOUSING	7A4-81
COMPONENT PARTS INSTALLATION	7A4-85
SPECIFICATIONS	7A4-107
SPECIAL TOOLS	7A4-111

GENERAL REPAIR INSTRUCTIONS

1. Before assembling, remove sand or mud etc. adhered to the outside of the transmission to prevent them from coming into the inside when disassembling or assembling.
2. Do not face the oil pan upward to avoid foreign particle coming in until oil pan is removed.
3. When disassembling the attaching the part made of light alloy such as a case, do not pry out with a screwdriver but tap with a plastic.
4. When disassembling or assembling, do it with bare hands or using vinyl grabs. To avoid lint coming in, do not use grabs or shop rug.
5. Ensure those disassembled parts are well organized and free from dust.
6. Before assembling, wash each disassembled part and all the water has evaporated, apply DEXRON®-III.Do not clean the aluminum or rubber part with alkaline agent. Never clean the rubber part of O-ring, gasket and oil seal, and clutch disc and brake disc with white gasoline.
7. Submerge the clutch disc and brake disc into DEXRON®-III before assembling. Especially a new disc should be submerged in for more than 15 minutes to pervade the oil into the lining.
8. Apply DEXRON®-III to the sliding and rotating surfaces and O-ring or oil seal ring, assemble them being carefully not to damage them.
9. Replace the damaged or deformed snap ring with a new one.
10. When placing a part in a vise,do not place it in a vise directly but use an aluminum plate.
11. Take a caution not to damage the contact surface of case, otherwise it causes fluid leakage. If damaged, replace the case with a new one.
12. Before applying sealant, clean off the adhered sealant on the sealing part, clean the sealing part with white gasoline.
13. Right after applying sealant, do not pour the fluid or drive the vehicle. Leave it for more than 2 hours.
14. Pay due attention when assembling those similar parts such as O-ring, snap ring, bearing and bearing race and not to lose a part.
15. When assembling oil seal ring, do not spread the ring ends as thick as more than necessary.
16. When assembling the thrust bearing, race and thrust washer, to prevent dropping off, a little amount of petroleum jelly in over haul gasket kit should be applied. Unless there is petroleum jelly, a little amount of Vaseline can be used.
17. Use fluid is DEXRON®-III.
18. Non - reusable parts:
    Always replace cotter pin, gaskets, O-rings and oil seals etc. with new ones.
19. Precoated parts are bolts and nuts, etc. that are coated with a sealant at the factory.
    a) If a precoated parts is retightened, loosened or caused to move in any way, it must be recoated with the specified adhesive.
    b) When reusing precoated parts, clean off the old adhesive and dry with compressed air. Then apply the specified adhesive to the bolt, nut or threads.
20. When necessary, use a sealer on gaskets to prevent leaks.
21. Carefully observe all specifications for bolt tightening torques. Always use a torque wrench.
22. Use of special tools and sealants may be required, depending on the nature of the repair. Be sure to use special tools and sealant where specified and follow the proper work procedure. A list of special tools and sealant can be found at the preparation of automatic transmission section.

COMPONENT PARTS REMOVAL

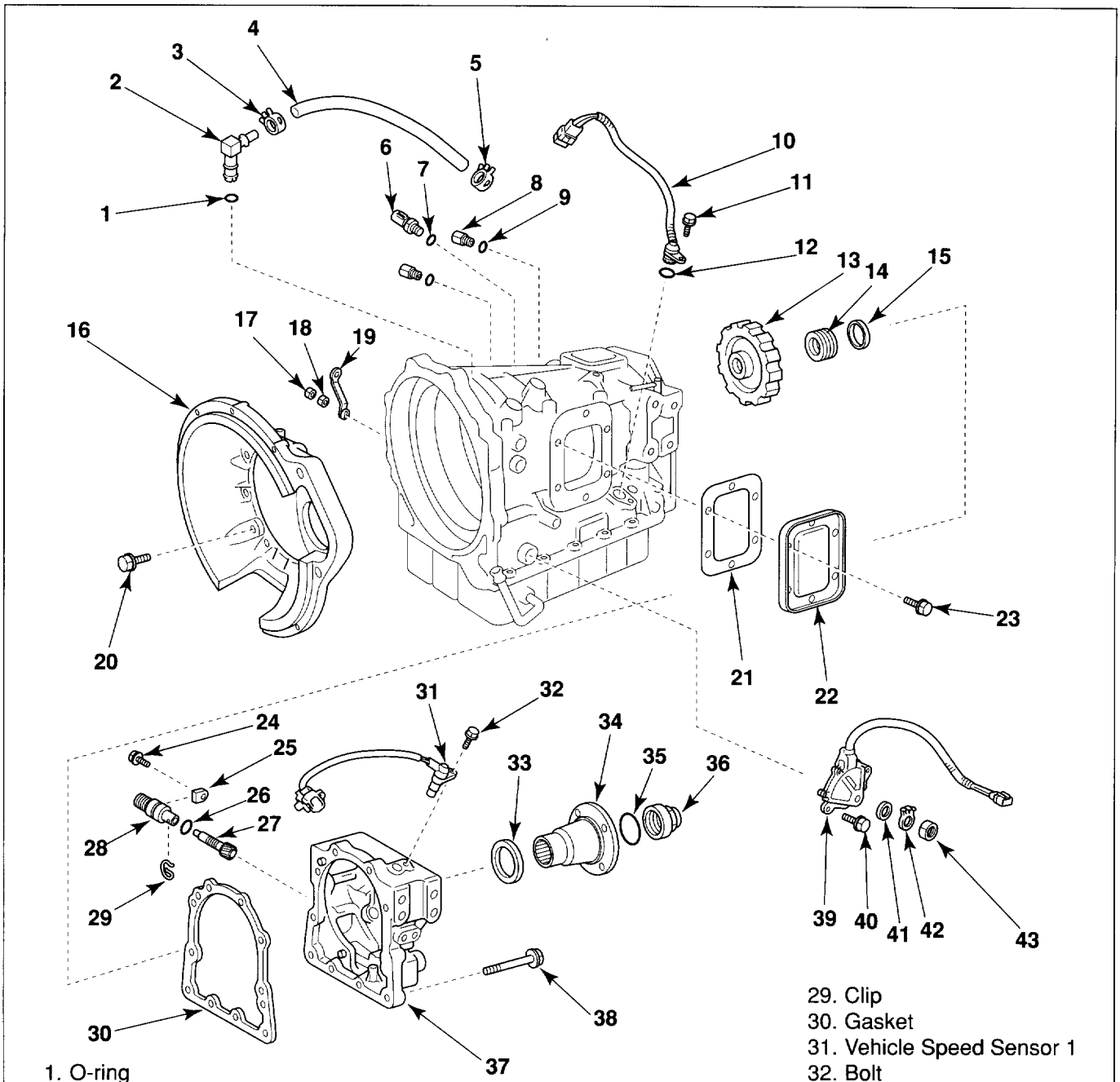

1. O-ring
2. Oil Cooler Union
3. Clip
4. Hose
5. Clip
6. ATF Temperature Switch
7. O-ring
8. Oil Cooler Union
9. O-ring
10. Transmission Solenoid Wire
11. Bolt
12. O-ring
13. Parking Lock Gear
14. Speedometer Drive Gear
15. Spacer
16. Torque Converter Housing
17. Nut
18. Nut
19. Control Shaft Lever
20. Bolt
21. Gasket
22. PTO Cover
23. Bolt
24. Bolt
25. Lock Plate
26. O-ring
27. Speedometer Driven Gear
28. Speedometer Sleeve
29. Clip
30. Gasket
31. Vehicle Speed Sensor 1
32. Bolt
33. Oil Seal
34. Companion Flange
35. O-ring
36. Lock Nut
37. Extension Housing
38. Bolt
39. Inhibitor Switch
40. Bolt
41. Grommet
42. Lock Washer
43. Nut

Figure 1. Component Parts (1)

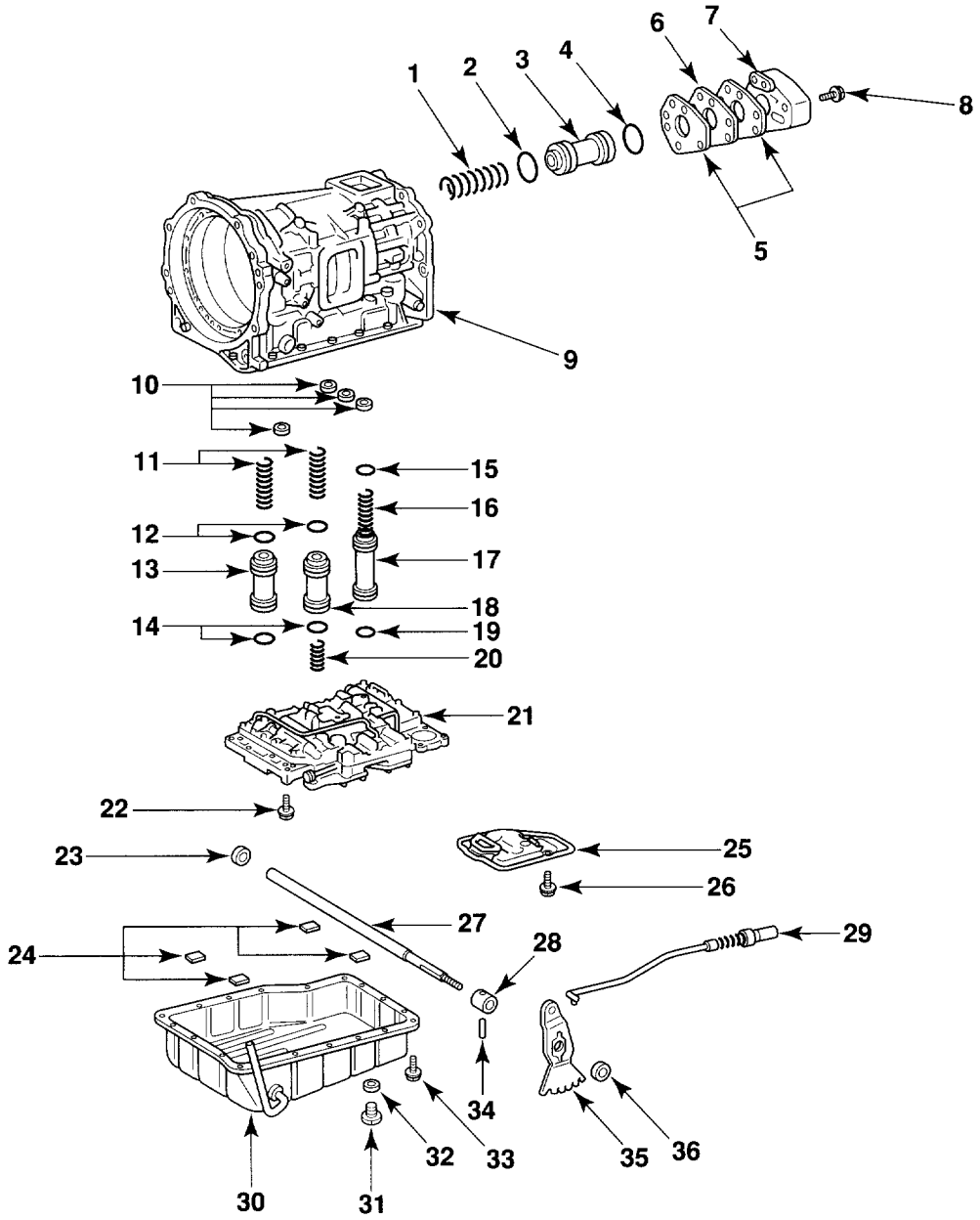

1. Spring
2. O-ring
3. C1 Accumulator
4. O-ring
5. Gasket
6. Plate
7. Front Clutch Accumulator Cover
8. Bolt
9. Transmission Case
10. Center Support Apply Gasket
11. Spring
12. O-ring
13. B0 Accumulator Piston
14. O-ring
15. O-ring
16. Spring
17. C2 Accumulator Piston
18. B1 Accumulator Piston
19. O-ring
20. Spring
21. Valve Body Assembly
22. Bolt
23. Oil Seal
24. Magnet
25. Oil Strainer
26. Bolt
27. Manual Valve Lever Shaft
28. Spacer
29. parking Lock Rod
30. Oil Pan
31. Drain Plug
32. Gasket
33. Bolt
34. Pin
35. Manual Valve Lever
36. Oil Seal

Figure 2. Component Parts (2)

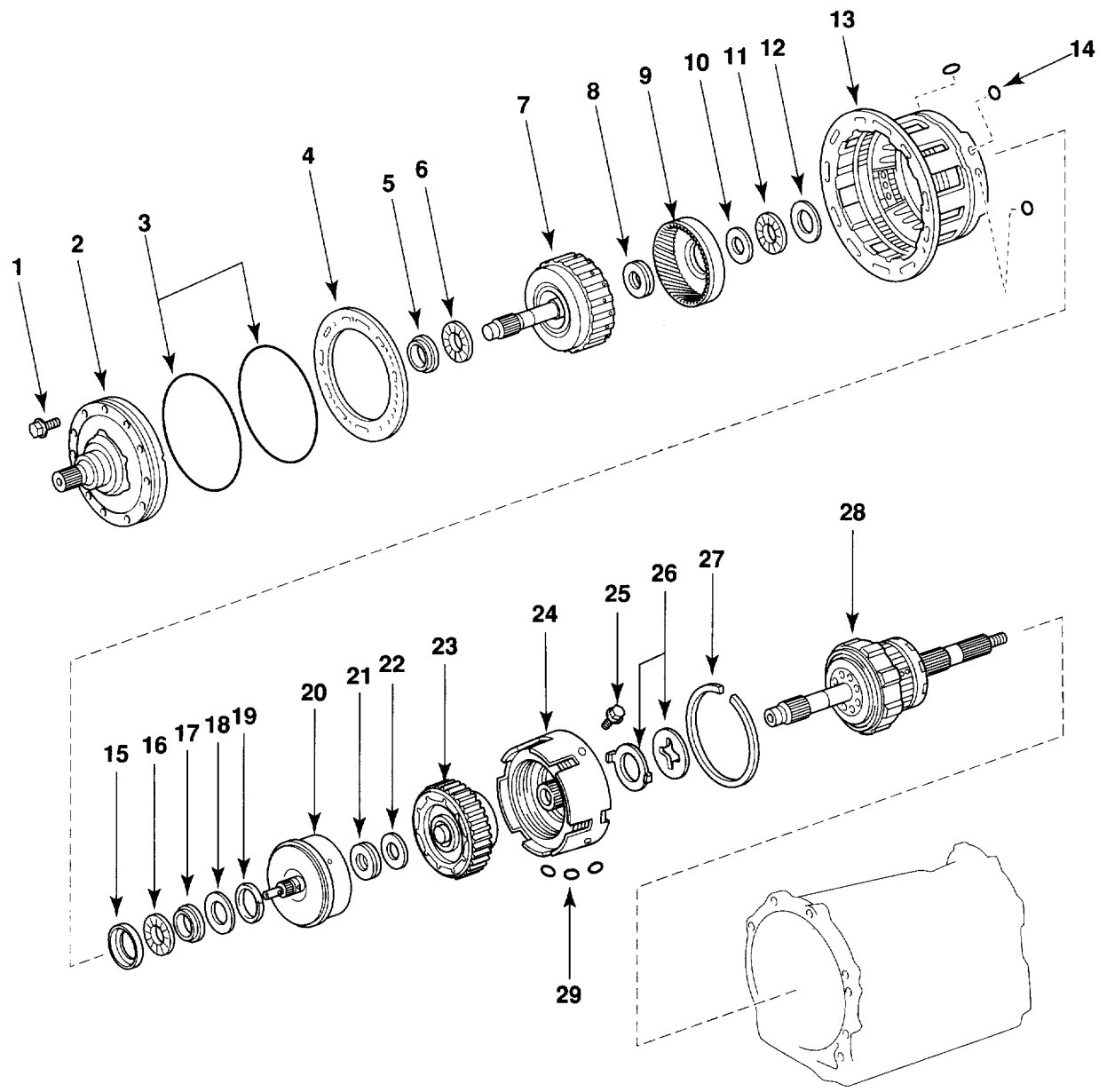

1. Bolt
2. Oil Pump
3. O-ring
4. Gasket
5. Race
6. Thrust Bearing
7. O/D Planetary Gear, O/D Direct Clutch and One-way Clutch Assembly
8. Thrust Bearing
9. O/D Ring Gear assembly
10. Race
11. Thrust Bearing
12. Race
13. O/D Case Assembly
14. O-ring
15. Race
16. Thrust Bearing
17. Race
18. Spacer
19. Oil Seal ring
20. Front Clutch Assembly
21. Thrust Bearing
22. Race
23. Rear Clutch Assembly
24. Center Support assembly
25. Bolt
26. Thrust Washer
27. Snap Ring
28. Planetary Gear, One-way Clutch and Output Shaft Assembly
29. O-ring

Figure 3. Component Parts (3)

Remove or Disconnect

Transmission Wiring
Disconnect the connectors, and remove the transmission wiring.

Breather Plug and Hose
1. Using 2 screwdrivers, pry out the breather plug and hose.

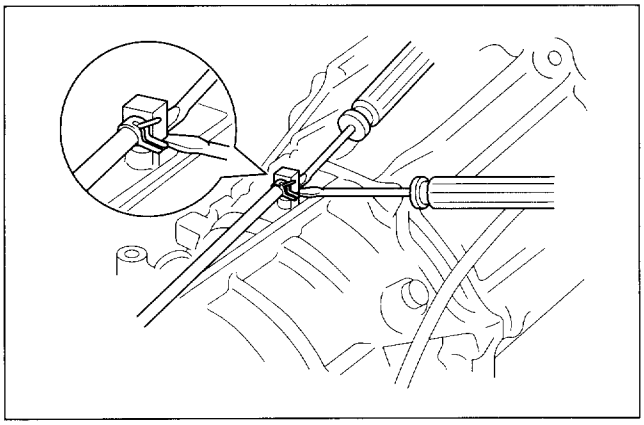

Figure 4. Breather Plug

2. Remove the O-ring from the breather plug.

Control Shaft Lever
Remove the 2 nuts and the lever.

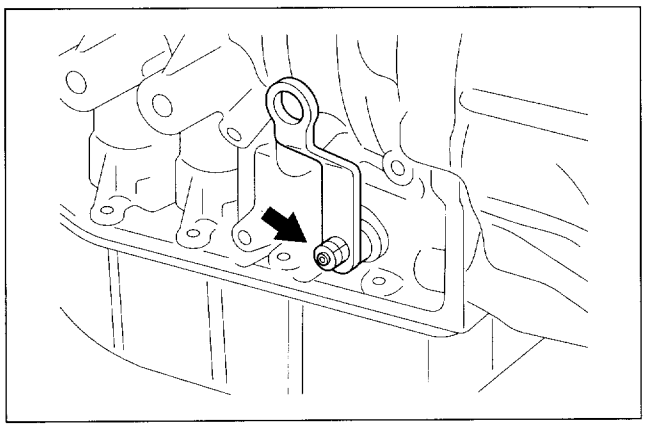

Figure 5. Control Shaft Lever

Inhibitor Switch
1. Unstake the lock washer.

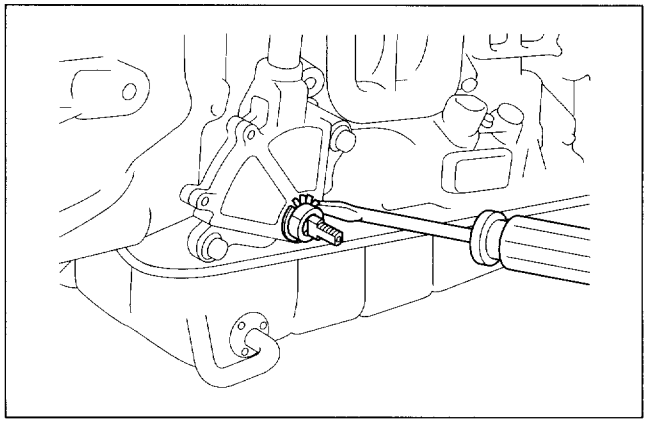

Figure 6. Lock Washer

2. Remove the nut, lock washer and grommet.
3. Remove the 2 bolts and inhibitor switch.

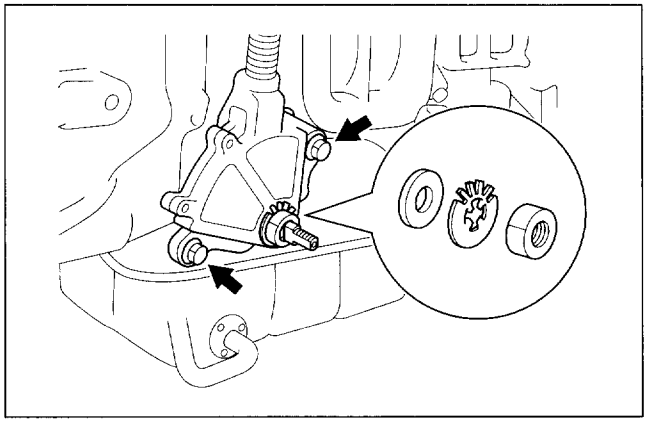

Figure 7. Inhibitor Switch Removal

ATF Temperature Switch
1. Remove the switch.
2. Remove the O-ring from the switch.

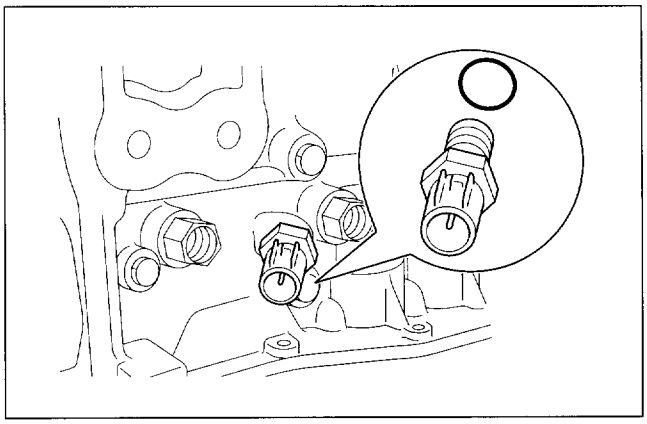

Figure 8. ATF Temperature Switch

Oil Cooler Unions
1. Remove the 2 unions.
2. Remove the O-ring from the both the unions.

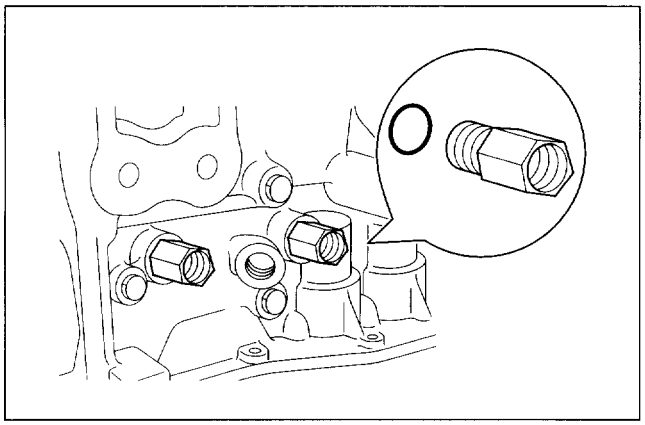

Figure 9. Oil Cooler Union

Torque Converter Housing

Remove the 8 bolts and torque converter housing.

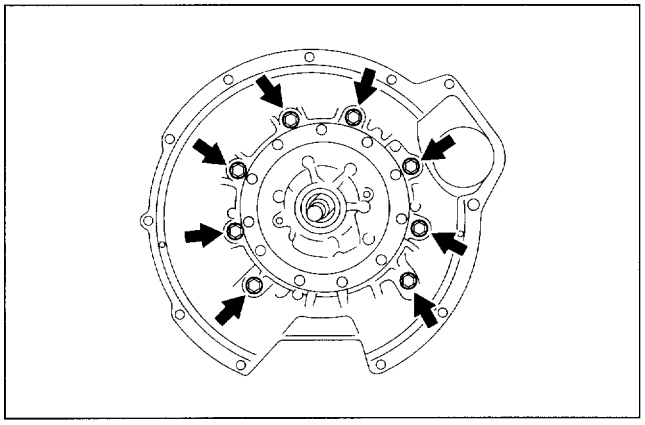

Figure 10. Torque Converter Housing

Vehicle Speed Sensor 1

1. Remove the bolt and the sensor.
2. Remove the O-ring from sensor.

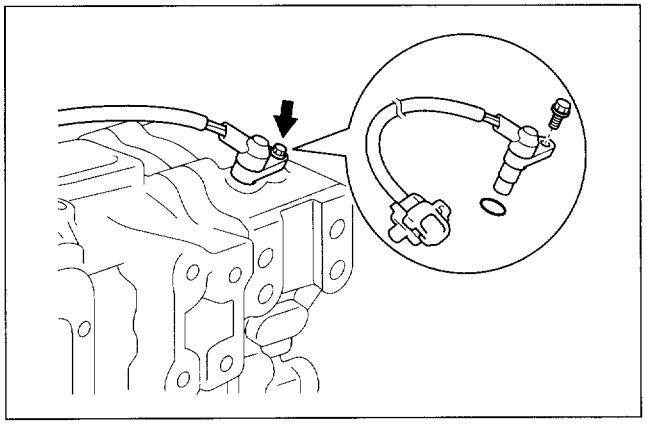

Figure 11. Vehicle Speed Sensor 1

Speedometer Driven Gear ASSY

1. Remove the lock bolt and plate.
2. Remove speedometer driven gear ASSY.
3. Remove the O-ring from the driven gear ASSY.

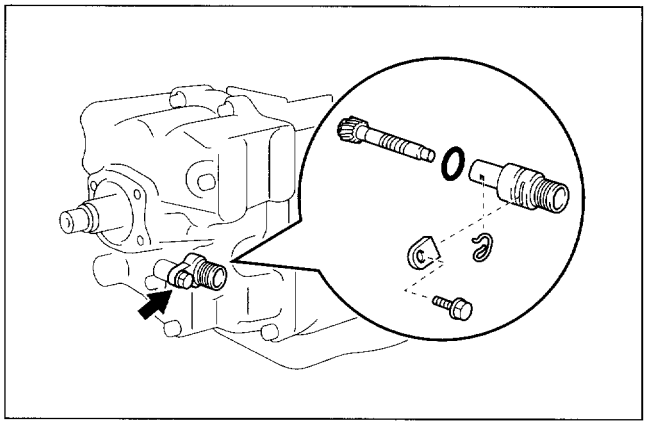

Figure 12. Speedometer Driven Gear ASSY

Extension Housing

1. Remove the 10 bolts.

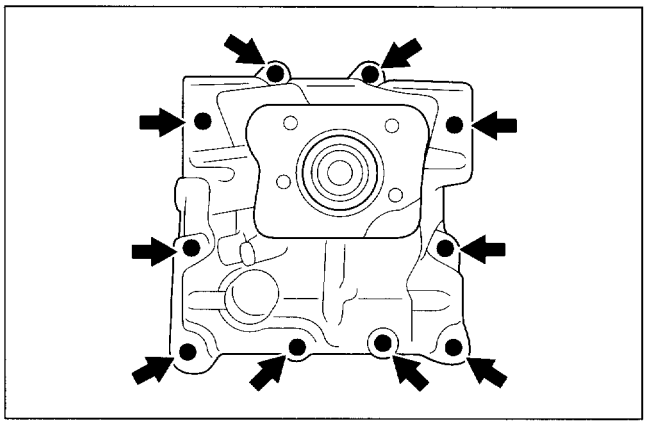

Figure 13. Extension Housing Bolt

2. Using a plastic hammer, remove the extension housing and gasket.

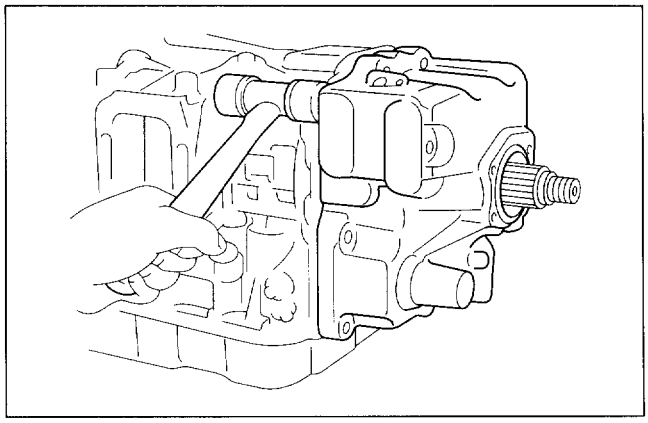

Figure 14. Extension Housing Removal

Speedometer Drive Gear and Spacer

Remove the spacer and speedometer drive gear from the output shaft.

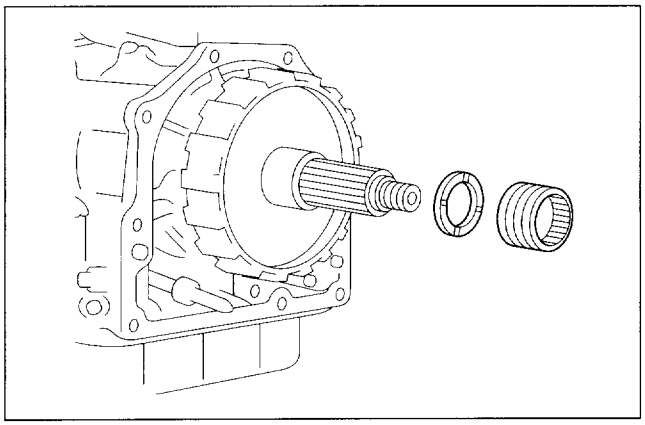

Figure 15. Speedometer Drive Gear

Parking Lock Gear

Remove the parking lock gear from the output shaft.

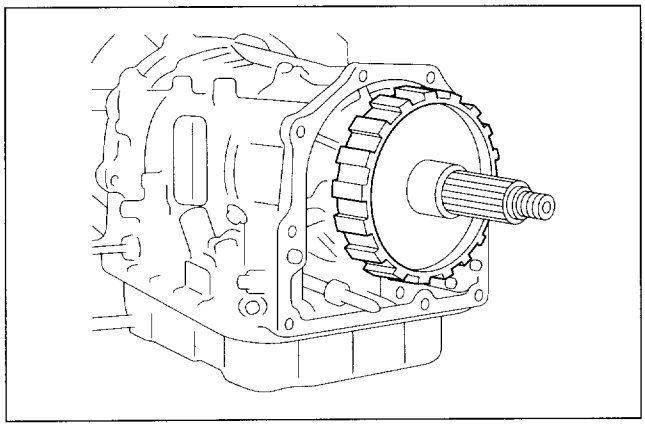

Figure 16. Parking Lock Gear

Oil Pan

NOTICE: Do not turn the transmission over as this will contaminate the valve body with any foreign matter at the bottom of the pan.

1. Remove the 20 bolts.

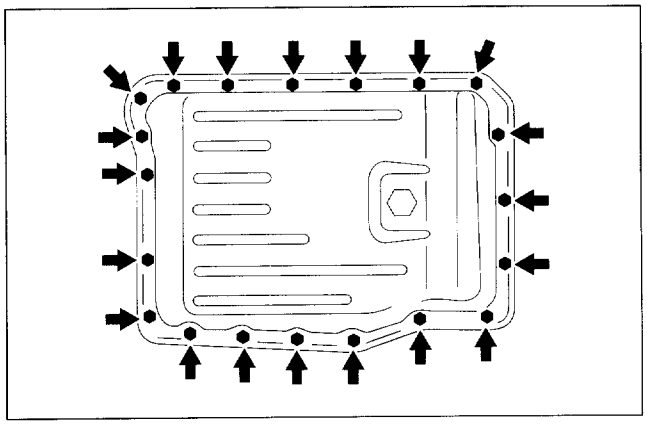

Figure 17. Oil Pan Bolt

2. Insert the blade of oil pan seal cutter between the transmission and oil pan, cut off applied sealer.
   Tool Required:
   5-8840-2153-0 Oil Pan Seal Cutter
   NOTICE:
   - **Be careful not to damage the oil pan flange.**
   - **Install several mounting bolts by tightening 2 to 3 pitches.**
   - **Do not tilt the oil pan as all the oil in the pan has not been drained.**

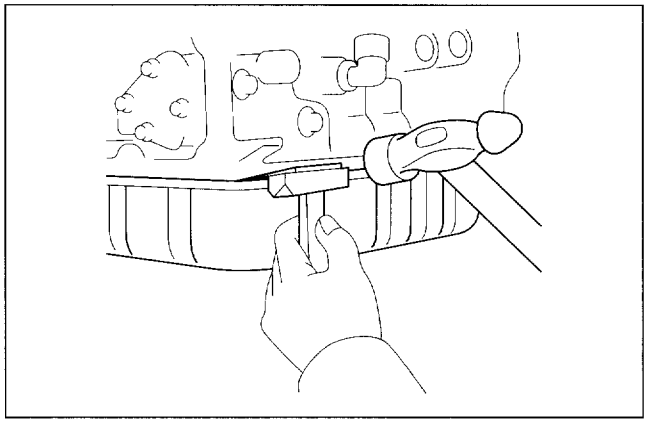

Figure 18. Oil Pan Removal

3. Examine particles in pan.
   Remove the magnets and use them to collect any steel particles.
   Carefully look at the foreign matter and particles in the pan and on the magnets to anticipate the type of wear you will find in the transmission:
   - Steel (magnetic): Bearing, gear, and clutch
   - Brass (non-magnetic): Bushing wear

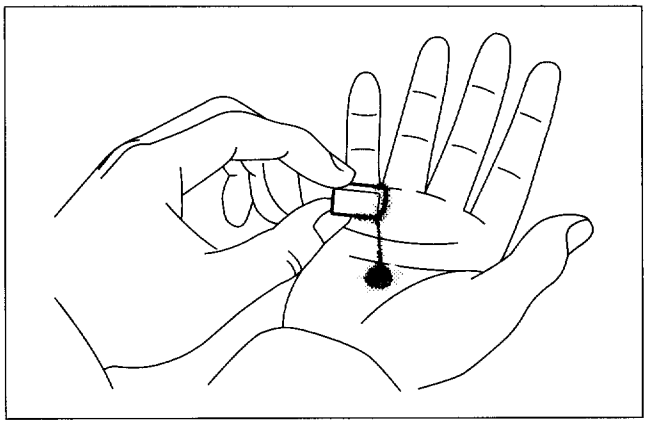

Figure 19. Particles

Oil Strainer

Remove the 4 bolts and oil strainer.

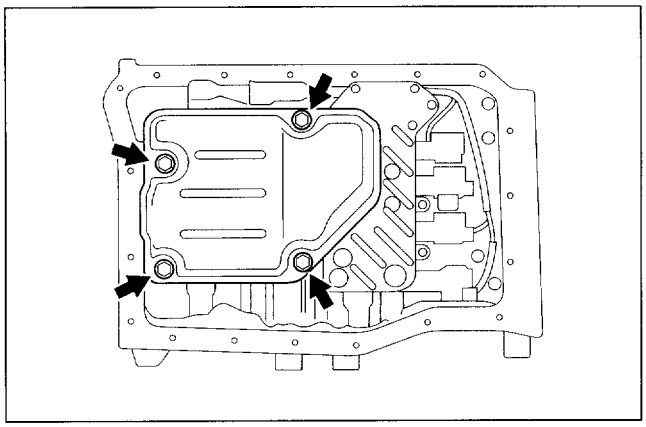

Figure 20. Oil Strainer

Solenoid Connectors

1. Disconnect the 4 connectors from the solenoids.
2. Disconnect the connector from the ATF temperature sensor.
3. Disconnect the connector from the line pressure solenoid.

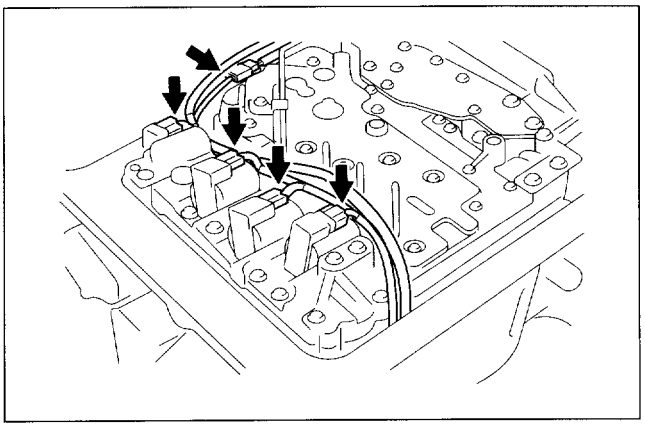

Figure 21. Solenoid Connectors

Valve Body

Remove the 21 bolts.

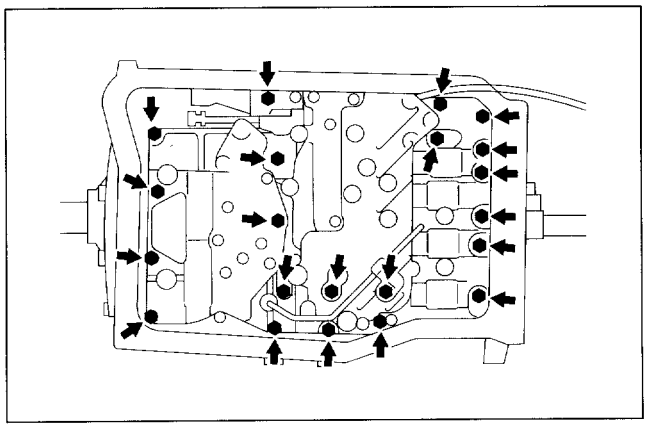

Figure 22. Valve Body Removal

Center Support Apply Gaskets

Remove the 4 apply gaskets.

NOTICE: Check the installation direction of apply gaskets.

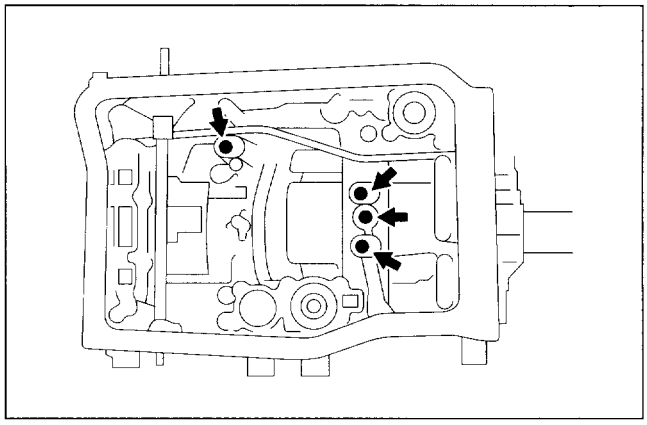

Figure 23. Center Support Apply Gasket

Solenoid Wiring

1. Remove the bolt and the solenoid wiring.
2. Remove the O-ring from it.

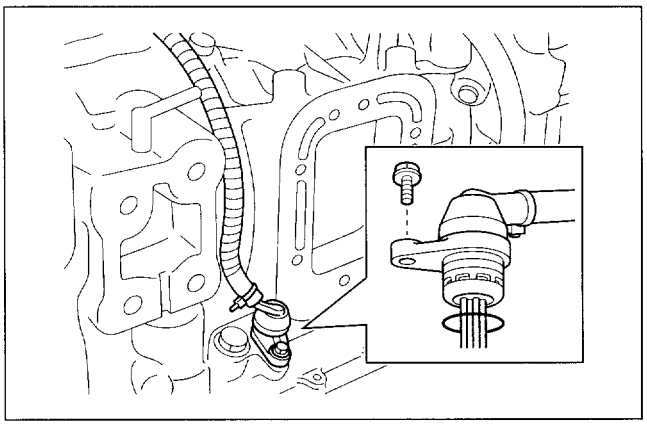

Figure 24. Solenoid Wiring Removal

C_1 Accumulator Piston and Spring

1. Remove the 4 bolts, front clutch accumulator cover, 2 gaskets and plate.

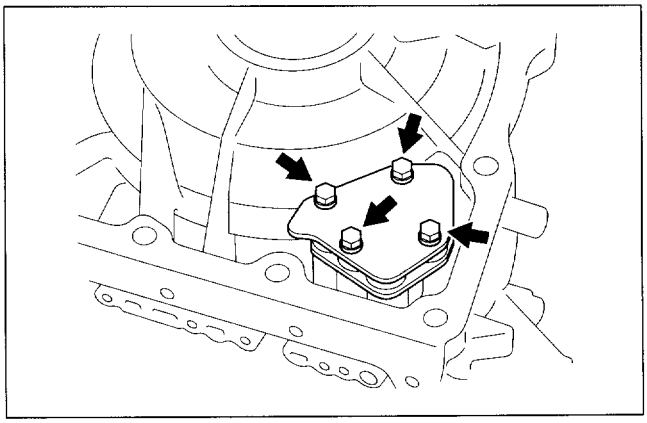

Figure 25. Front Clutch Accumulator Cover

2. Remove the accumulator piston and spring by applying compressed air 392–785 kPa (4–8 kg/cm², 57–114 psi) to the oil hole.
NOTICE: Cover the area around the piston with a shop rag as the piston and oil gush out.

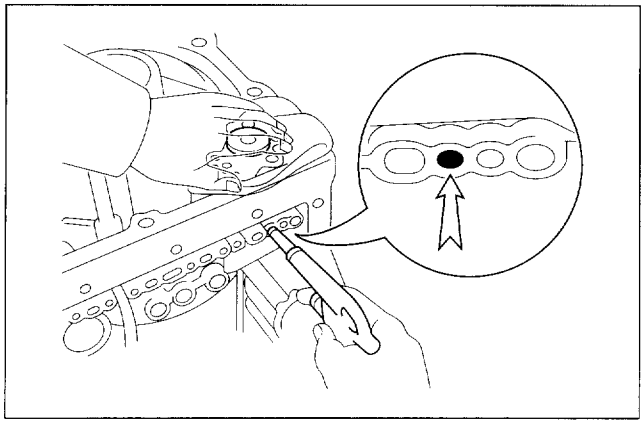

Figure 26. C_1 Accumulator Piston Removal

C_2 B_0 B_1 Accumulator Pistons And Springs

1. Remove the C_2 accumulator piston and spring by applying compressed air 392–785 kPa (4–8 kg/cm², 57–114 psi) to the oil hole.
NOTICE: Cover the area around the piston with a shop rag as the piston and oil gush out.

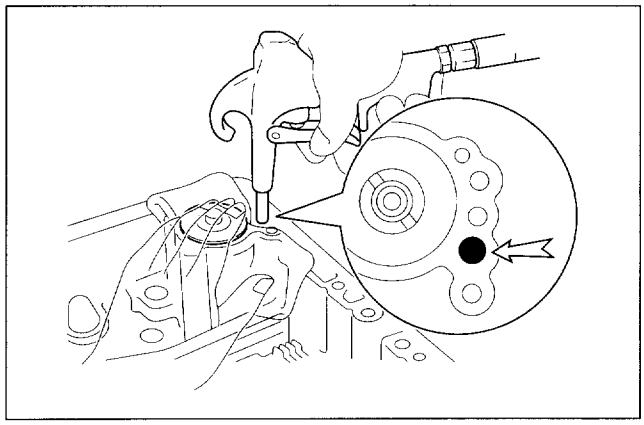

Figure 27. C_2 Accumulator Piston Removal

2. Remove the B_0 accumulator piston together with the B_1 accumulator piston by applying compressed air to the oil hole.

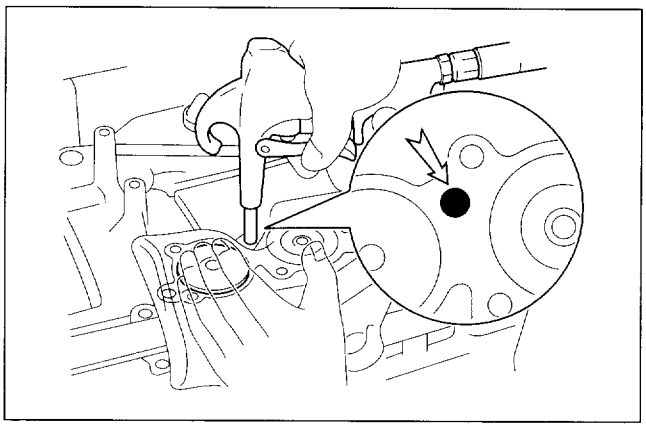

Figure 28. B_0/B_1 Accumulator Piston Removal

3. Remove the B_0 and B_1 accumulator pistons.
4. Remove the O-ring from the accumulator pistons.

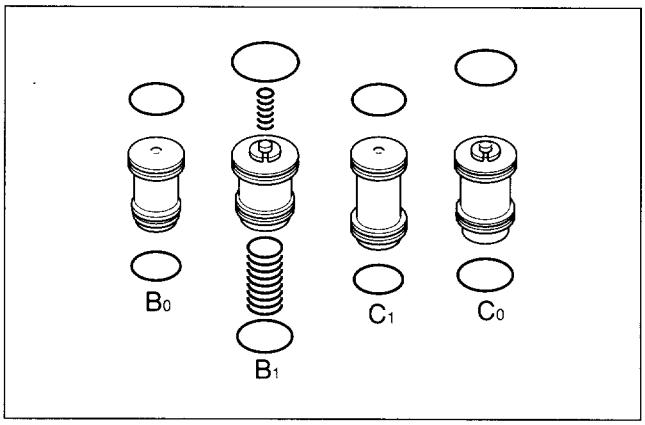

Figure 29. Accumulator Piston and O-ring

Manual Valve Lever, Shaft and Oil Seals

1. Using a screwdriver or chisel, cut off the spacer and remove it from the shaft.

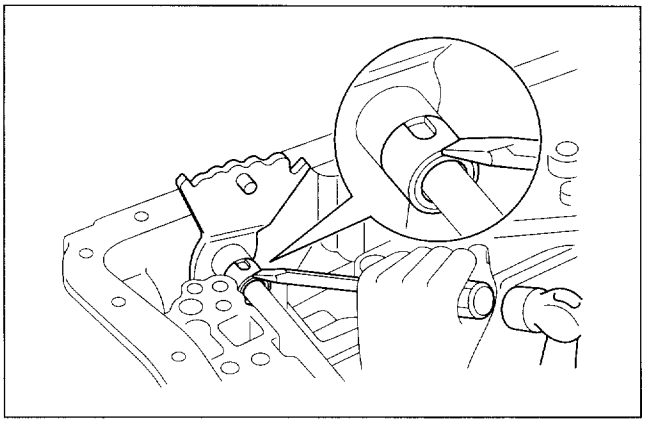

Figure 30. Spacer Removal

2. Using a pin punch, tap out the pin.
   NOTICE: Do not drop the pin into the transmission case.

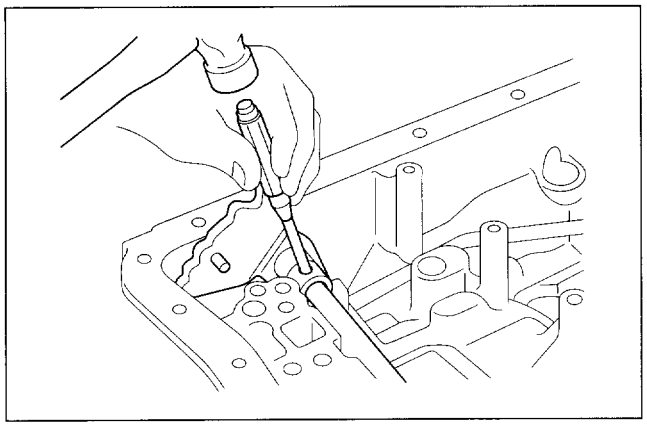

Figure 31. Spring Pin Removal

3. Pull the manual valve lever shaft out through the case, remove the manual valve lever, parking lock rod assembly, the 2 plate washers and wave washer.
4. Disconnect the parking lock rod from the manual valve lever.

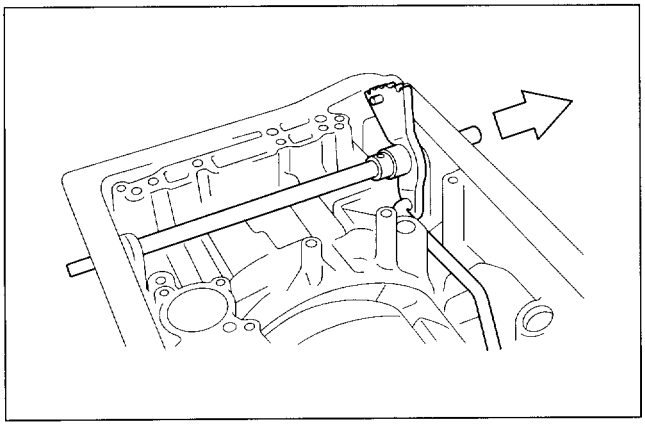

Figure 32. Manual Valve Lever Shaft Removal

5. Using a screwdriver, pry out the 2 oil seals.

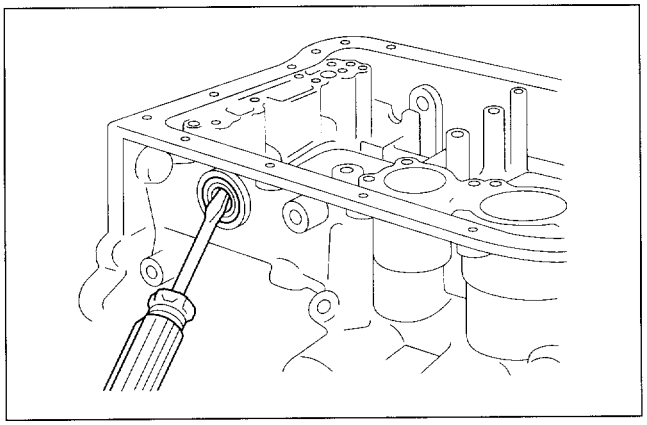

Figure 33. Oil Seal Removal

Thrust Clearance of Overdrive Input Shaft (Overdrive Planetary Gear)

1. Push the O/D input shaft toward the rear of the transmission by applying a force of 49–98 N (5–10 kg, 11.0–22.0 lb).

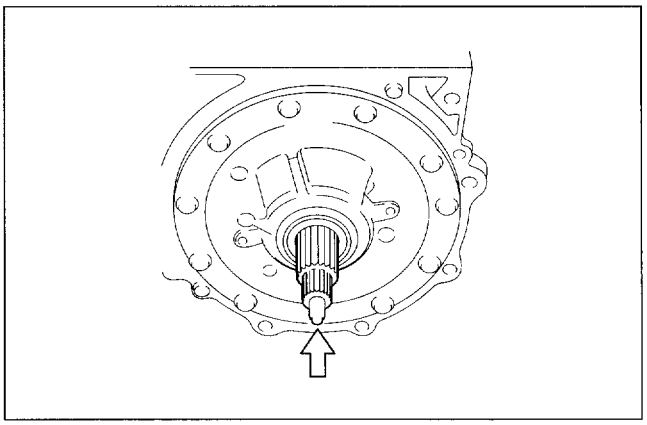

Figure 34. O/D Input Shaft

2. Using dial indicator, measure the thrust clearance of the input shaft.
   Standard thrust clearance: 0.40–0.90 mm (0.0157–0.0354 in.)
   Maximum thrust clearance: 0.90 mm (0.0354 in.)

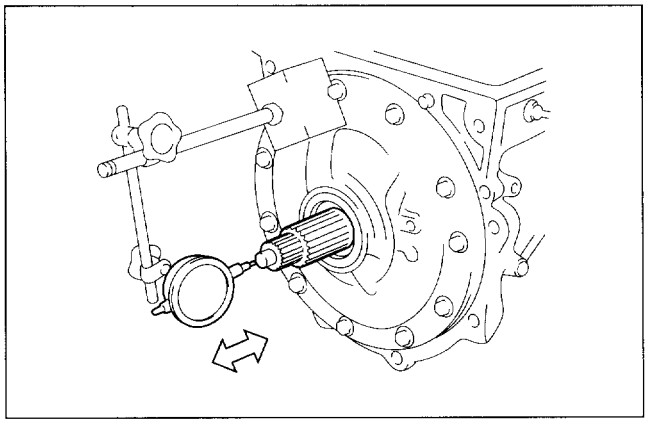

Figure 35. Thrust Clearance of Input Shaft

Oil Pump

1. Place matchmarks on the oil pump and transmission case.
2. Remove the 11 bolts holding the oil pump to the transmission case.

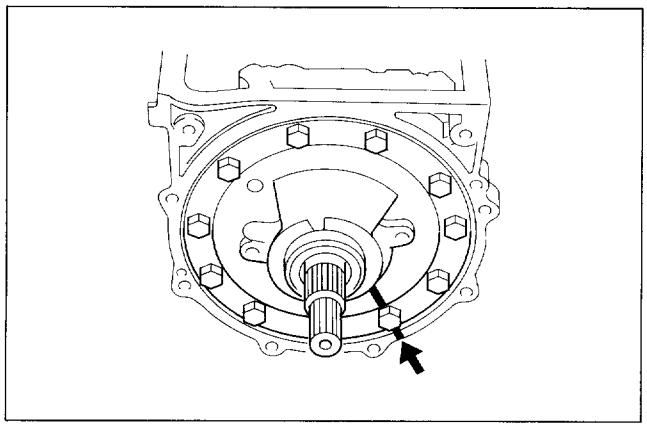

Figure 36. Matchmarks

3. Using oil pump remover, remove the oil pump and gasket.
   Tool Required:
   5-8840-2652-0 Oil Pump Remover
4. Remove the O-ring from the oil pump.

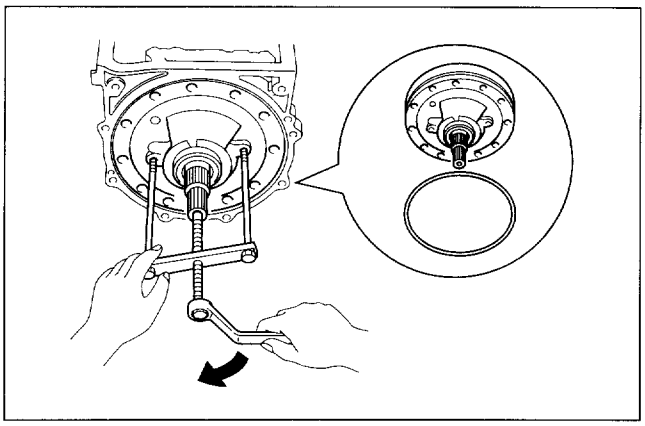

Figure 37. Oil Pump Remover

5. Remove the race and thrust bearing from the O/D direct clutch drum or oil pump.
6. Remove the O-ring from the transmission case.

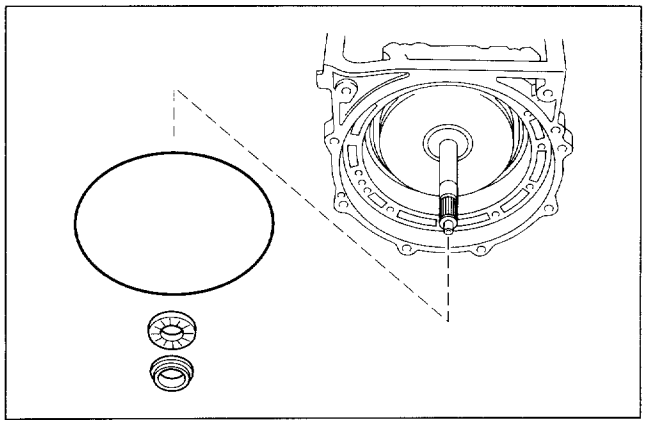

Figure 38. Race, Thrust Bearing and O-ring

Overdrive Planetary Gear, Overdrive Direct Clutch and One-Way Clutch Assembly

1. Place plate on the installation surface of the oil pump.
   Tool Required:
   5-8840-2647-0 Plate
2. Using calipers, measure the distance between the tops of plate and the clutch drum for assembly.
   NOTICE: Record the measured distance to keep it as a reference when assembling.

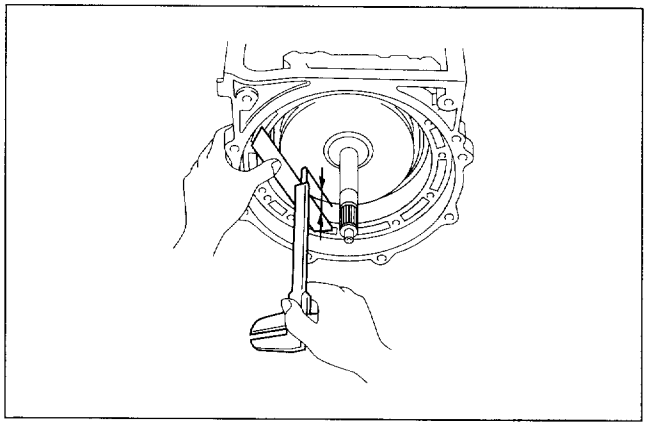

Figure 39. Measuring Distance

3. Remove the O/D planetary gear, direct clutch and one-way clutch assembly.

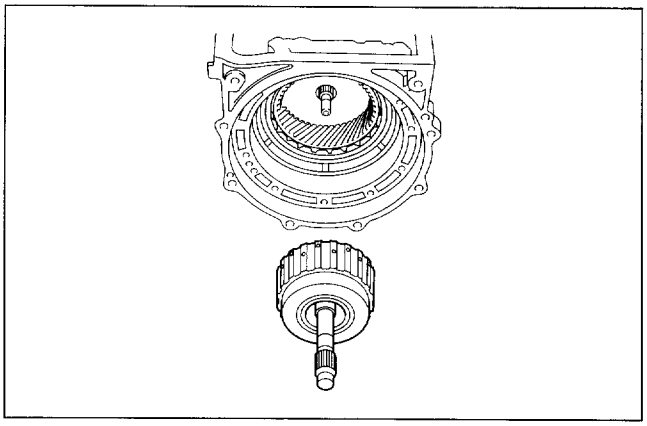

Figure 40. Clutch Assembly Removal

4. Remove the thrust bearing from the O/D planetary gear.

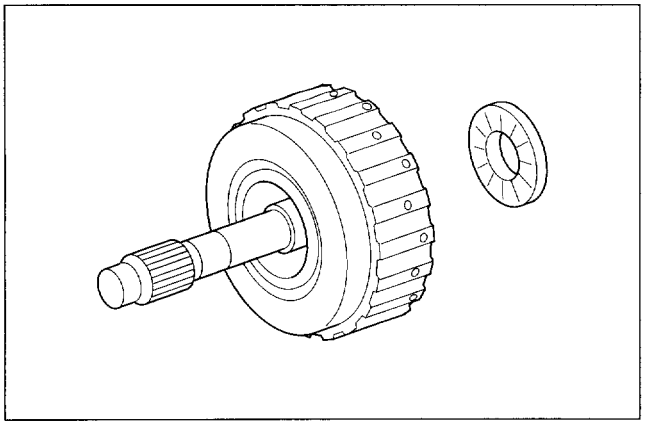

Figure 41. Thrust Bearing

Overdrive Planetary Ring Gear Assembly

1. Remove the ring gear assembly from the O/D case.

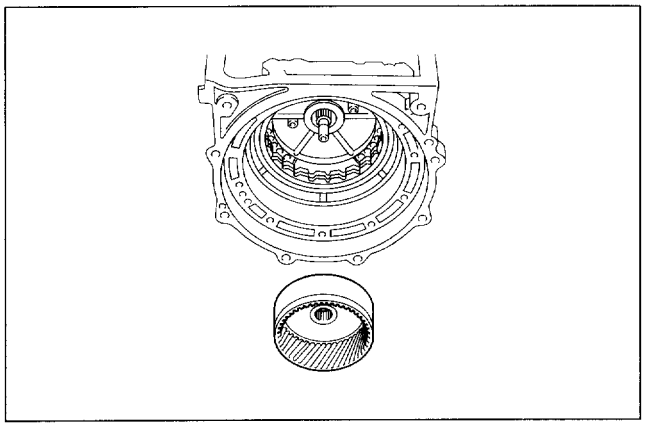

Figure 42. Ring Gear Removal

2. Remove the thrust bearing and the 2 races from the O/D case.

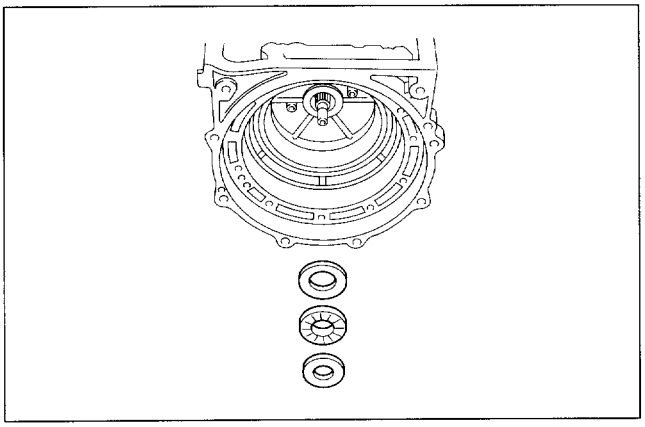

Figure 43. Thrust Bearing and Race

Thrust Clearance of Input Shaft (Front Clutch Drum)

1. Temporarily install the 3 bolts.

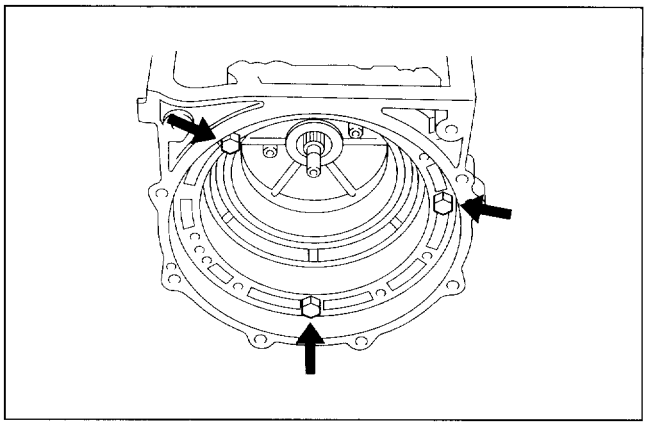

Figure 44. Bolt Installation

2. Push the transmission output shaft toward the front of the transmission by applying a force of 49–98 N (5–10 kg, 11.0–22.0 lb).
3. Push the O/D case toward the rear of the transmission by applying a force of 49–98 N (5–10 kg, 11.0–22.0 lb).

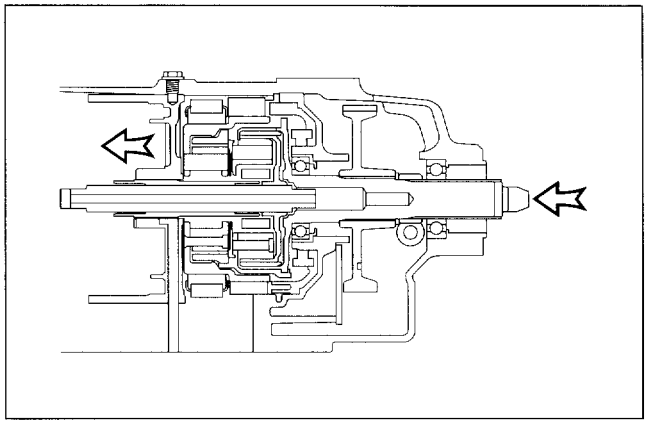

Figure 45. Trust Clearance

4. Using the extension bar and dial indicator, measure the thrust clearance of the input shaft.
   Tool Required:
   5-8840-2651-0 Extension Bar
   Standard thrust clearance: 0.30–0.70 mm (0.0118–0.0276 in.)
   Maximum thrust clearance: 0.70 mm (0.0276 in.)

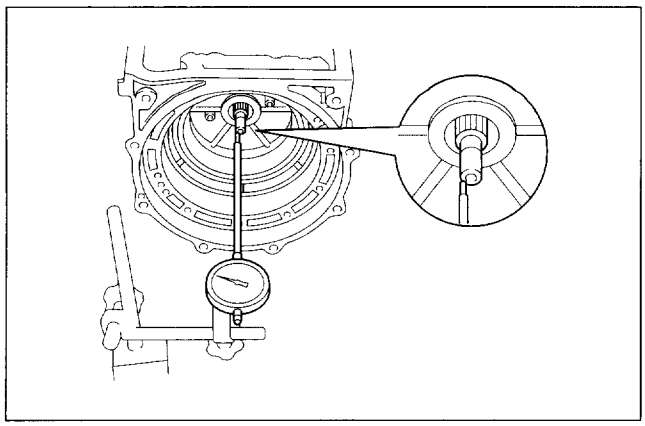

Figure 46. Measuring Clearance

Overdrive Case Assembly

1. Remove 3 bolts.

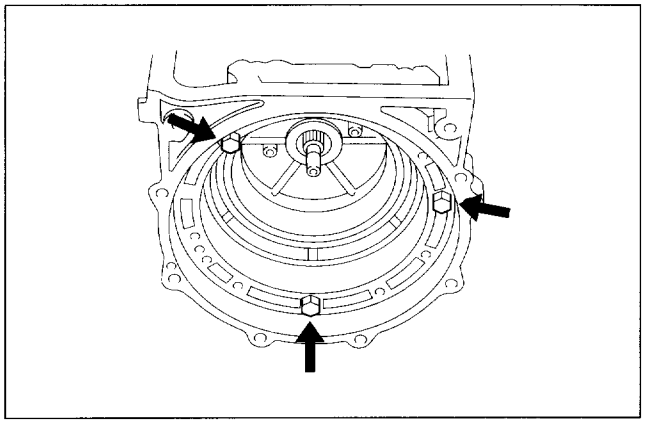

Figure 47.Bolt Removal

2. Using the oil pump remover, remove the O/D case assembly.
   Tool Required:
   5-8840-2652-0 Oil Pump Remover

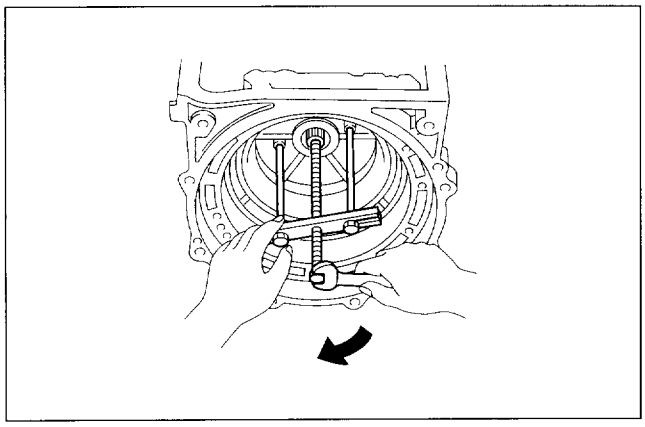

Figure 48. O/D Case Assy Removal

3. Remove the 3 O-rings from the oil holes of the O/D case.

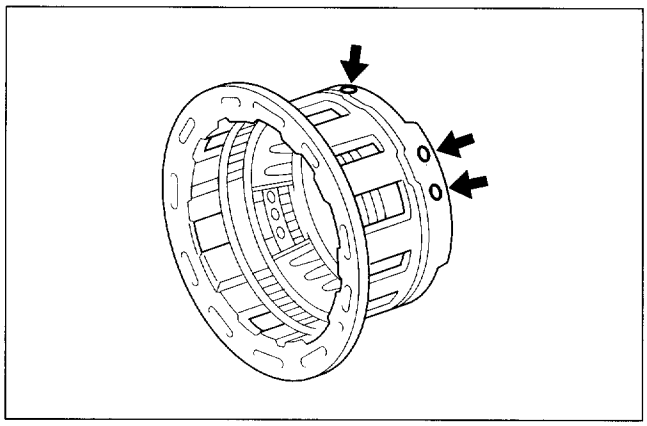

Figure 49. O-ring Location

Front Clutch Assembly

1. Place the plate, on the installation surface of the oil pump.
   Tool Required:
   5-8840-2647-0 Plate
2. Using calipers, measure the distance between the tops of the plate and the clutch drum for assembly.
   NOTICE: Record the measured distance to keep it as a reference when assembling.

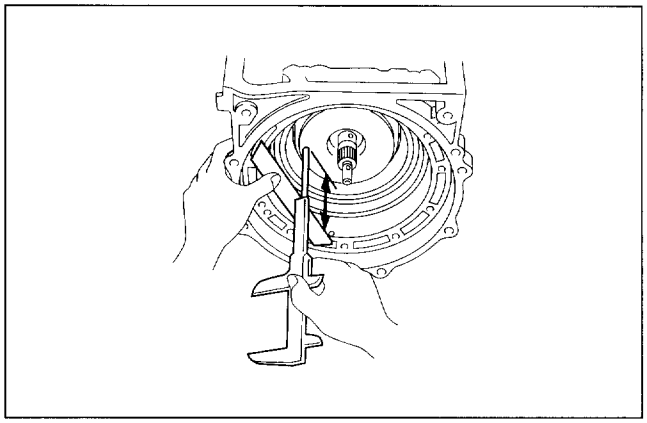

Figure 50. Measuring Distance

3. Remove the front clutch assembly.

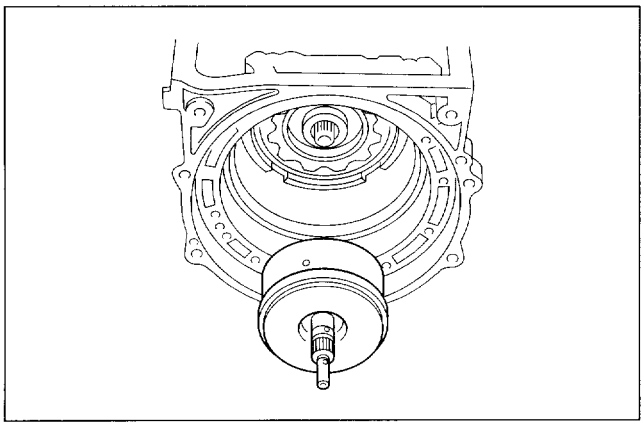

Figure 51. Front Clutch Assembly Removal

4. Using a screwdriver, remove the oil seal ring from the input shaft.

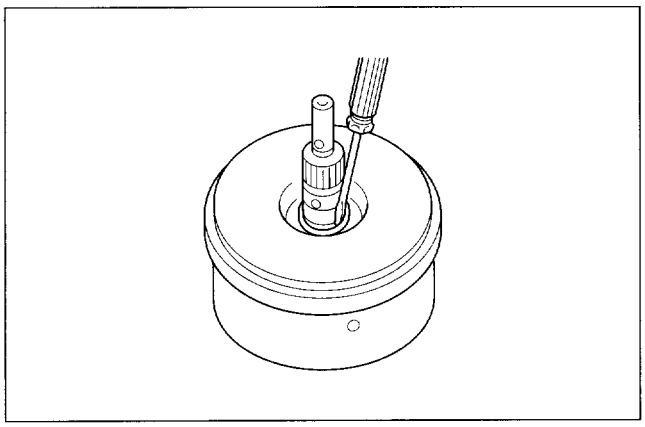

Figure 52. Oil Seal Removal

5. Remove the 2 races, thrust bearing and spacer from the front clutch drum.

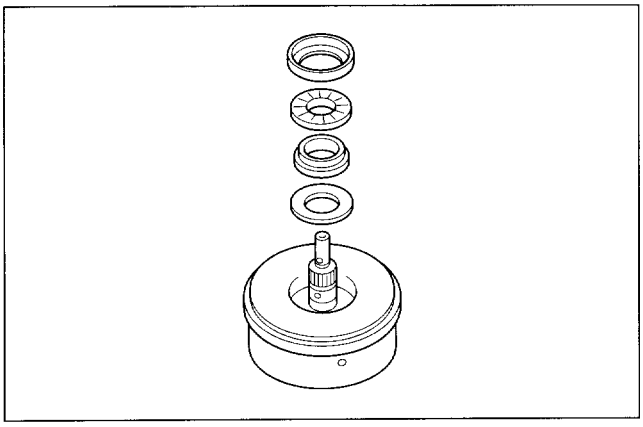

Figure 53. Race, Thrust Bearing and Spacer

6. Remove the thrust bearing and race from the rear clutch drum.

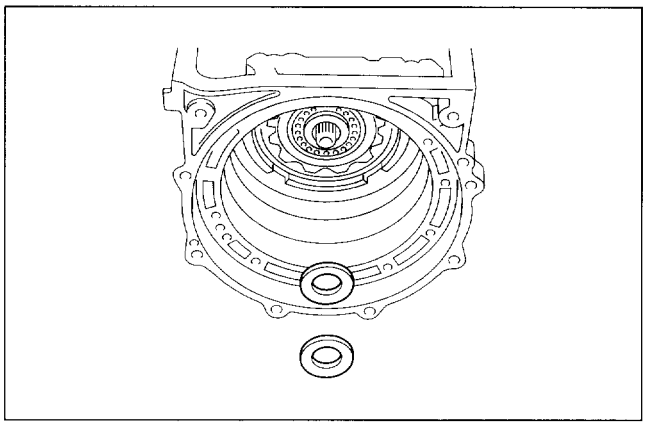

Figure 54. Thrust Bearing and Race

Rear Clutch Assembly

Install 2 wires into flukes of the clutch discs, and remove the rear clutch assembly.

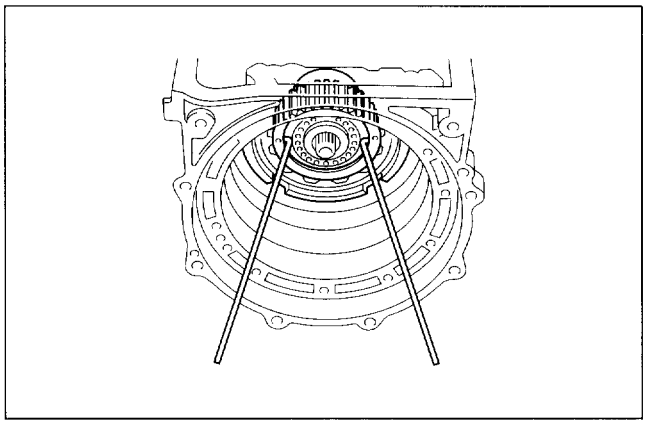

Figure 55. Rear Clutch Assembly Removal

Center Support Assembly

1. Push the transmission output shaft toward the front of the transmission by applying a force of 49–98 N (5–10 kg, 11.0–22.0 lb).
2. Push the center support toward the rear of the transmission by applying a force of 49–98 N (5–10 kg, 11.0–22.0 lb), then pull with the same amount of force.

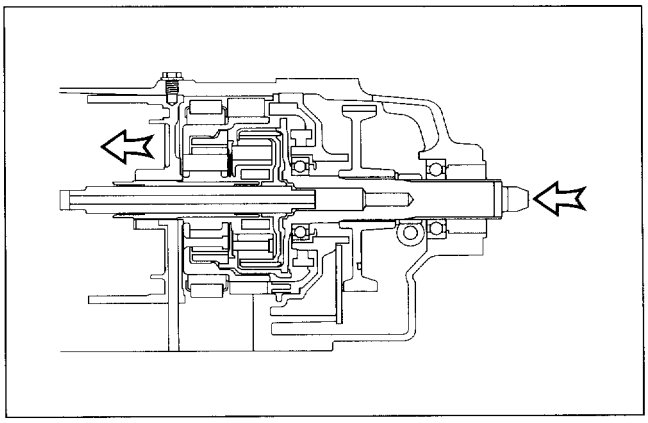

Figure 56. Thrust Clearance

3. Place the plate on the center support.
   Tool Required:
   5-8840-2647-0 Plate
4. Using calipers, measure distance (A) between the tops of the plate and the thrust washer on the front planetary gear.
5. Using calipers, measure the thickness (B) of the plate.

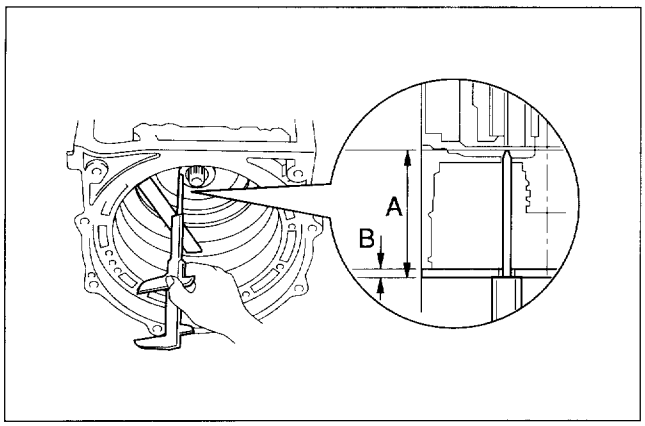

Figure 57. Measuring Distance

6. Remove the 3 center support set bolts.

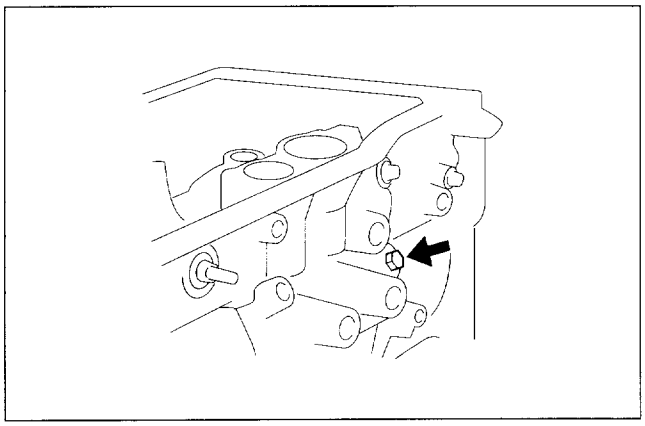

Figure 58. Center Support Bolt

7. Using the oil pump remover, remove the center support assembly.
   Tool Required:
   5-8840-2652-0 Oil Pump Remover

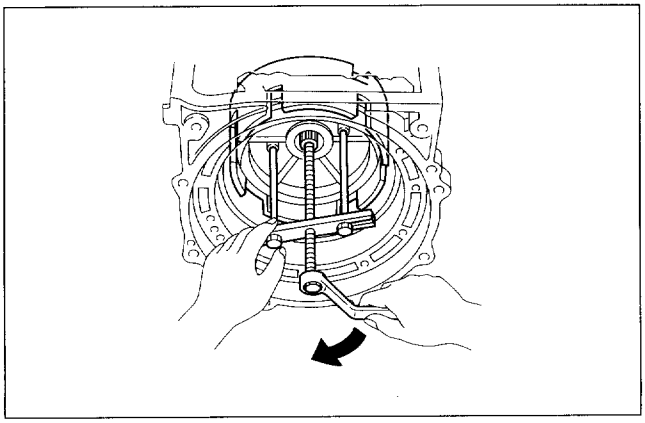

Figure 59. Center Support Assembly Removal

8. Turn over the center support together with the thrust washer, and place it on a flat surface.
9. Inserting the calipers into the thrsut washer hole, measure the distance (C) between it and the flat surface.
   Center support thrust clearance: A – (B + C)
   Standard thrust clearance: 0.30–0.70 mm (0.0118–0.0276 in.)
   Maximum thrust clearance: 0.90 mm (0.0354 in.)

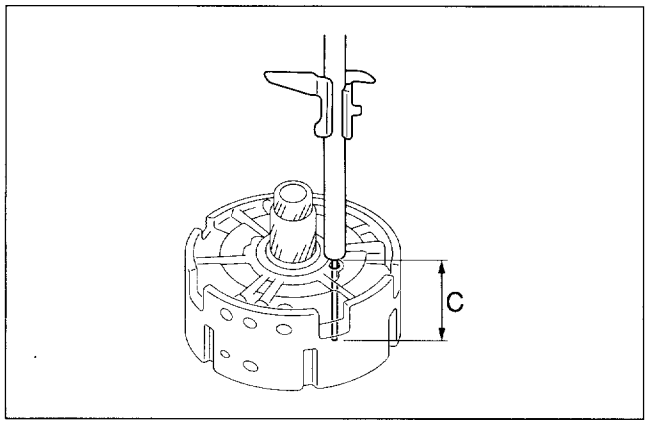

Figure 60. Measuring Distance

10. Remove the 3 O-rings from the center support.

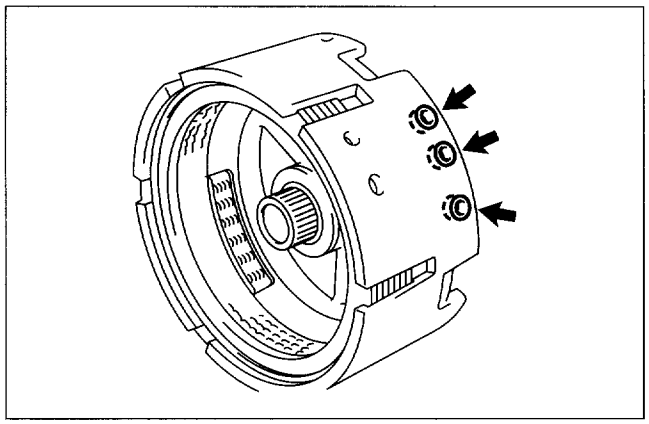

Figure 61. O-ring of Center Support

11. Remove the thrust washer from the center support.

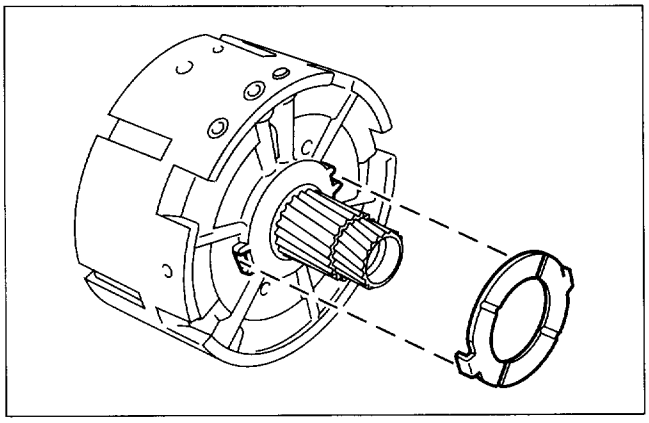

Figure 62. Thrust Washer

Planetary Gears, One-Way Clutch and Output Shaft Assembly

1. Remove the thrust washer from the planetary gear.

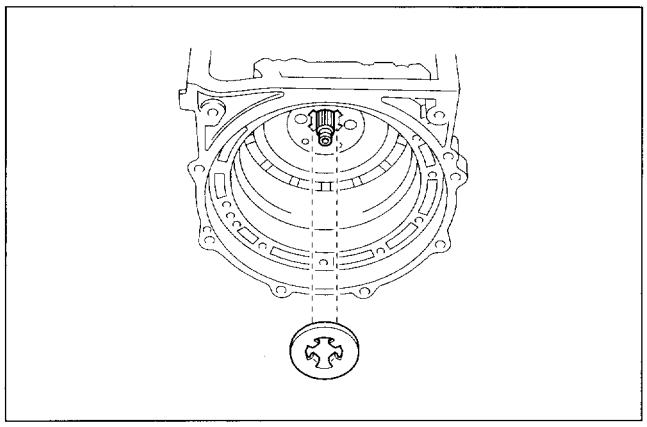

Figure 63. Thrust Washer

2. Using a screwdriver, remove the snap ring.

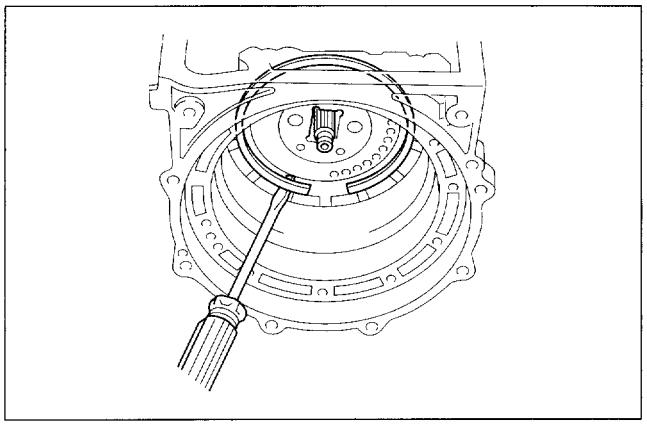

Figure 64. Snap Ring Removal

3. Remove the planetary gears, one-way clutch and output shaft assembly.

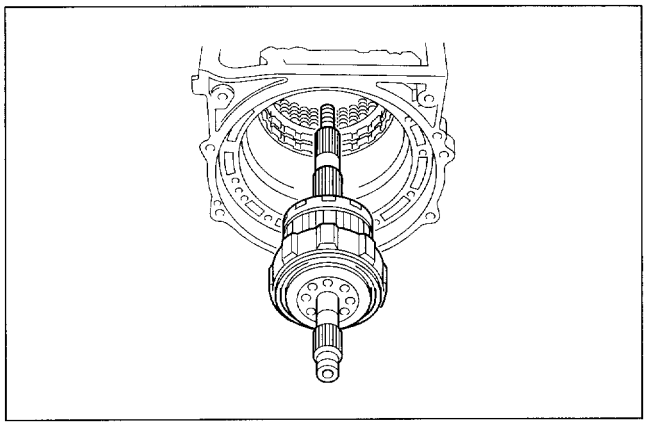

Figure 65. Output Shaft Assembly Removal

General Notes

The instructions here are organized so that you work on only one component group at a time. This will help avoid confusion from similar-looking parts of different subassemblies being on your workbench at the same time.
The component groups are inspected and repaired from the converter housing side.
As much as possible, complete the inspection, repair and assembly before proceeding to the next component group. If a component group can not be assembled because parts are being ordered, be sure to keep all parts of that group in a separate container while proceeding with disassembly, inspection, repair and assembly of other component groups.
Recommended fluid of the automatic transmission is DEXRON®-III.

GENERAL CLEANING NOTES:

1. All disassembled parts should be washed clean and any fluid passages and holes blown through with compressed air.
2. When using compressed air to dry parts, always aim away from yourself to prevent accidentally spraying automatic transmission fluid or kerosene on your face.
3. The recommended automatic transmission fluid or kerosene should be used for cleaning.

PARTS ARRANGEMENT:

1. After cleaning, the parts should be arranged in proper order to allow performing inspection, repairs, and reassembly with efficiency.
2. When disassembling a valve body, be sure to keep each valve together with the corresponding spring.
3. New disc for the brakes and clutches that are to be used for replacement must be soaked in transmission fluid for at least 15 minutes before assembly.

GENERAL ASSEMBLY:

1. All oil seal rings, clutch discs, clutch plates, rotating parts, and sliding surfaces should be coated with transmission fluid prior to reassembly.
2. All gaskets and rubber O-rings should be replaced.
3. Make sure that the ends of a snap ring are not aligned with one of the cutouts and are installed in the groove correctly.
4. If a worn bushing is to be replaced, the subassembly containing that bushing must also be replaced.
5. Check thrust bearings and races for wear or damage. Replace if necessary.
6. Use petroleum jelly to keep parts in place.

OIL PUMP

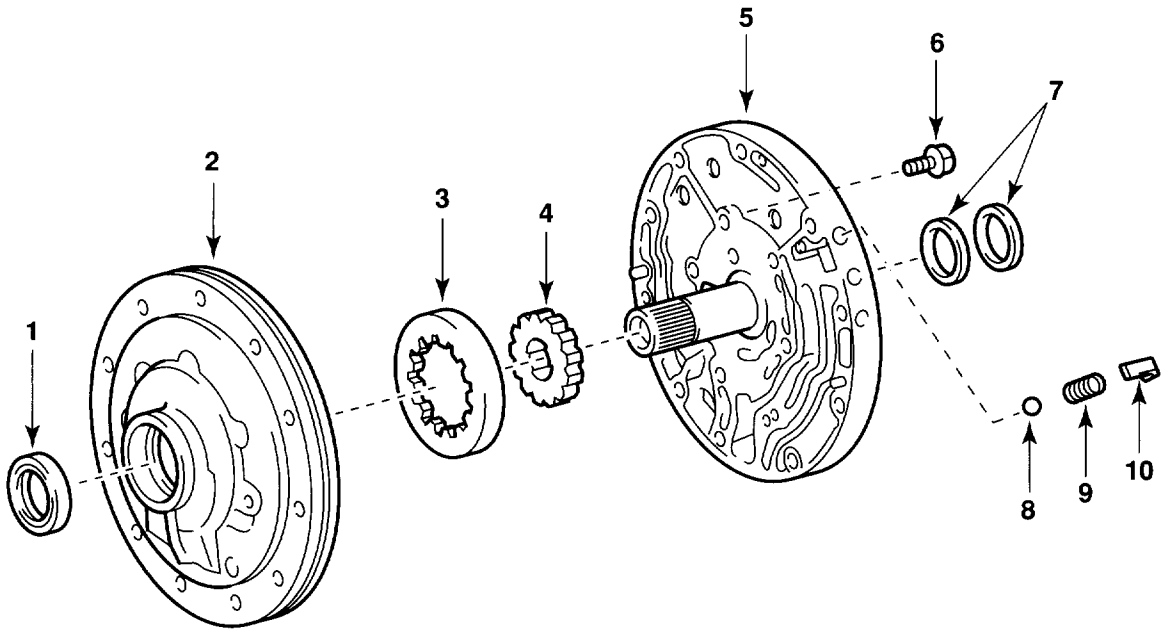

1. Oil Seal
2. Oil Pump Body
3. Oil Pump Driven Gear
4. Oil Pump Drive Gear
5. Oil Pump Cover
6. Bolt
7. Oil Seal Ring
8. Check Ball
9. Spring
10. Spring Seat

Figure 66. Oil Pump Assembly

Disassemble

1. Use torque converter as work stand.
   Make sure the drive gear rotates smoothly when installed to the torque converter.

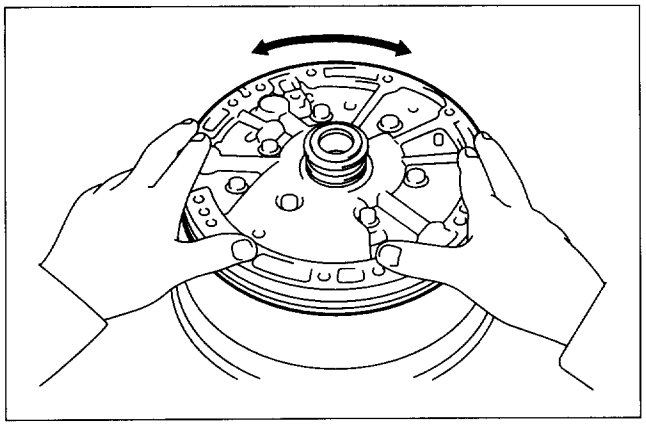

Figure 67. Drive Gear Rotation Check

2. Remove the 2 oil seal rings.

CAUTION:
- **Do not damage the oil seal rings and do not deform them unless necessary.**
- **Do not damage the claws on the oil seal rings.**

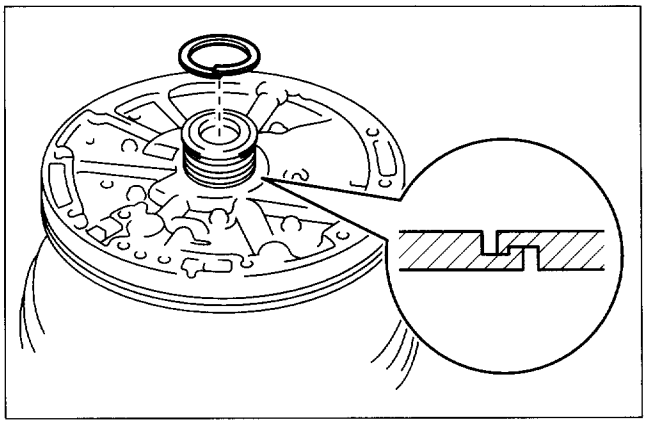

Figure 68. Oil Seal Removal

3. Using a screwdriver, compress the spring and remove the spring seat.
   Remove the spring and check ball.

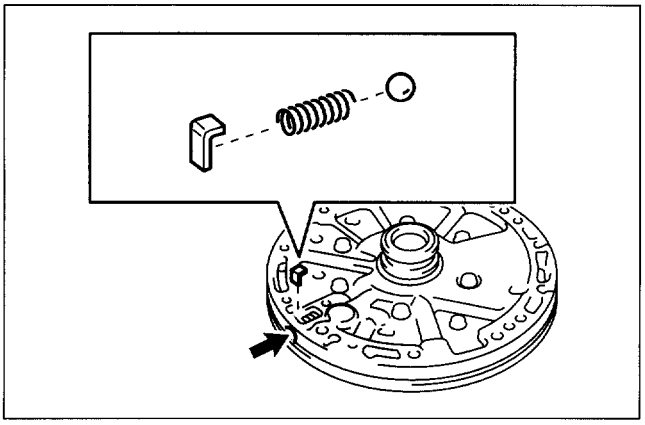

Figure 69. Check Ball Removal

4. Remove 7 bolts and pump cover.

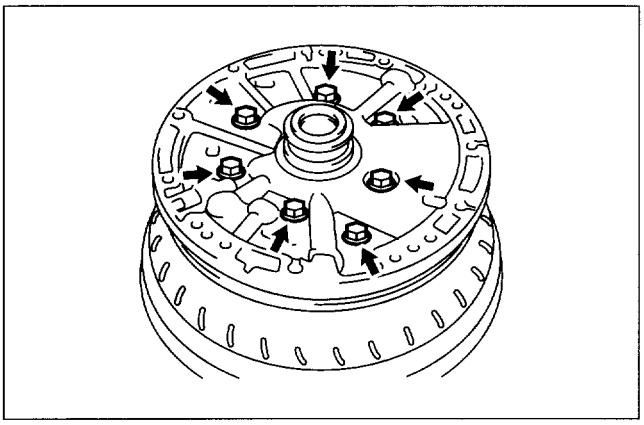

Figure 70. Pump Cover Removal

5. Using a screwdriver, pry off the oil seal.

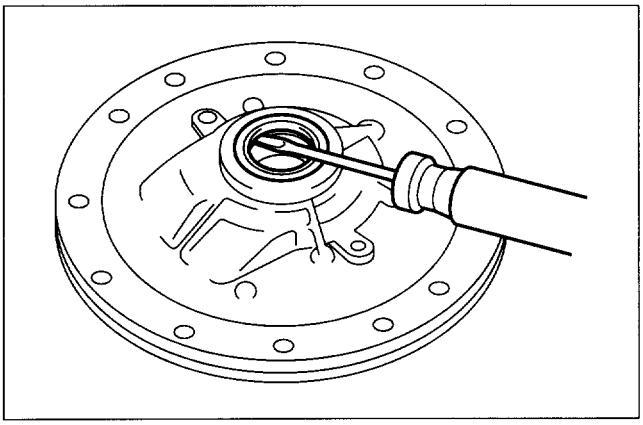

Figure 71. Oil Seal Removal

Inspect

1. Inspect bushing of oil pump body.
   Using a dial indicator, measure the inside diameter.
   Standard inside diameter: 42.050–42.075 mm (1.6555–1.6565 in.)
   Maximum inside diameter: 42.13 mm (1.6587 in.)
   NOTICE: Measure at several points and take the average value.
   If the inside diameter is greater than maximum, replace the oil pump assembly.

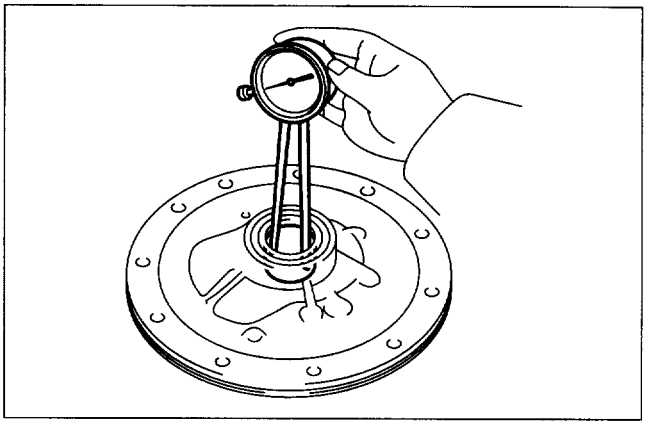

Figure 72. Bushing Inside Diameter Measurement

2. Inspect bushings of oil pump cover.
   Using a dial indicator, measure the inside diameter.
   Front bushing standard inside diameter: 24.000–24.021 mm (0.9449–0.9457 in.)
   Rear bushing standard inside diameter: 26.500–26.521 mm (1.0433–1.0441 in.)
   Front bushing maximum inside diameter: 24.07 mm (0.9476 in.)
   Rear bushing maximum inside diameter: 26.57 mm (1.0461 in.)
   NOTICE: Measure at several points and take the average value.
   If the inside diameter is greater than the maximum, replace the oil pump assembly.

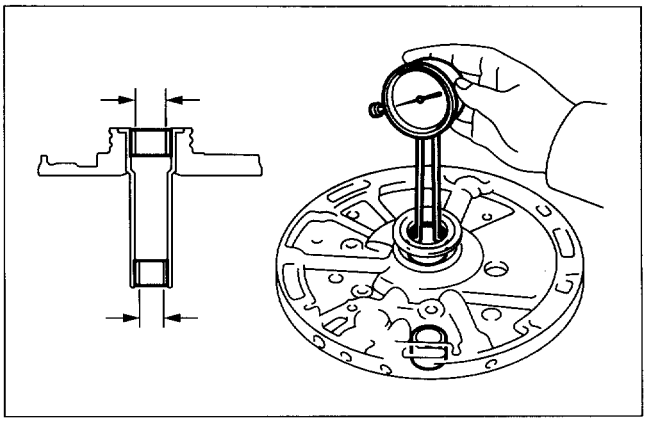

Figure 73. Bushing Inside Diameter Measurement

Assemble

1. Install oil seal.
   Coat the new oil seal with DEXRON®-III.
   Using installer, tap in a new oil seal.
   Tool Required:
   5-8840-2644-0 Oil Seal Installer
   The oil seal end should be flushed with the outer edge of the pump body.
   Apply grease to the oil seal lip.

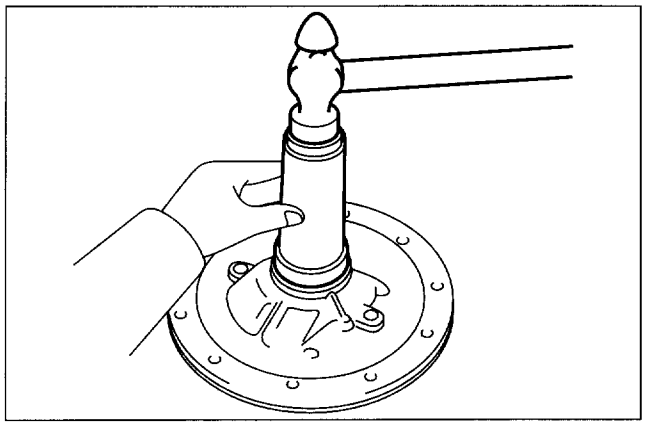

Figure 74. Oil Seal Installation

2. Install oil pump cover to oil pump body.
   Align the bolt holes of the oil pump body and cover.
   Install the pump cover with the 7 bolts.

Tighten

Torque: 21 N·m (2.1 kg·m, 15lb·ft)

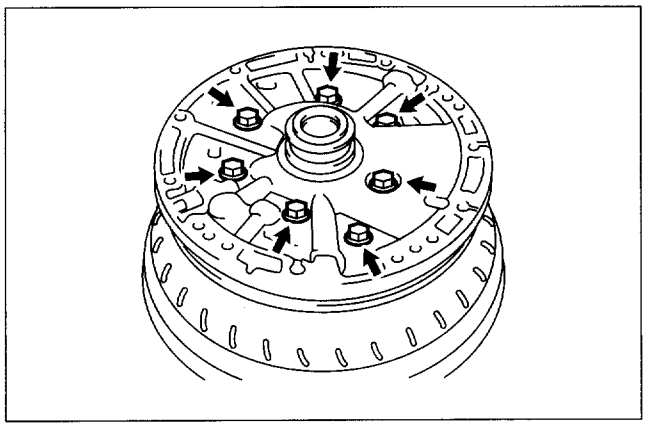

Figure 75. Oil Pump Cover Installation

3. Install the check ball and spring.
   Using a screwdriver, compress the spring and install the spring seat.

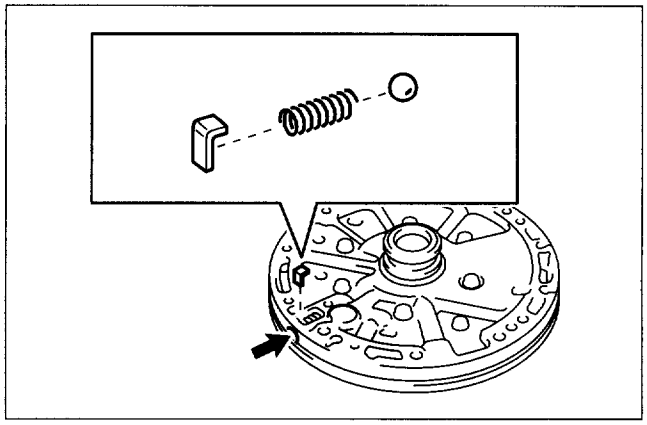

Figure 76. Check Ball Installation

4. Coat the 2 oil seal rings with ATF.
   Contract the oil seal rings, and install them onto the stator shaft.
   CAUTION:
   - **Do not spread the ring ends too much.**
   - **Do not damage the claws on the oil seal rings.**

   NOTICE:
   - **If the rings are damaged or deformed, replace them with new ones.**
   - **After installing the oil seal rings, check that they rotate smoothly.**

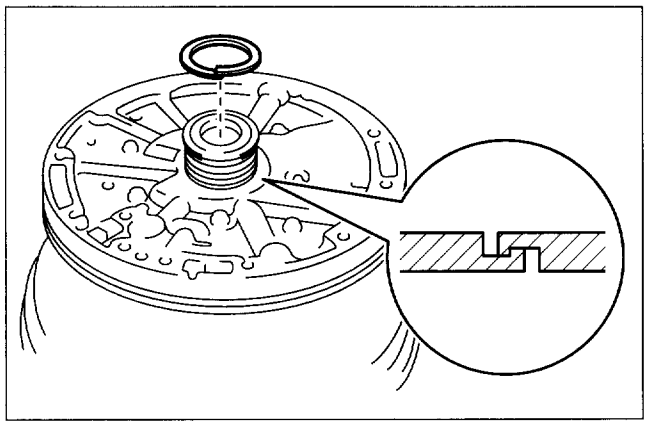

Figure 77. Oil Seal Installation

6. Check oil pump drive rotation.
   Make sure the drive gear rotates smoothly when installed to the torque converter.

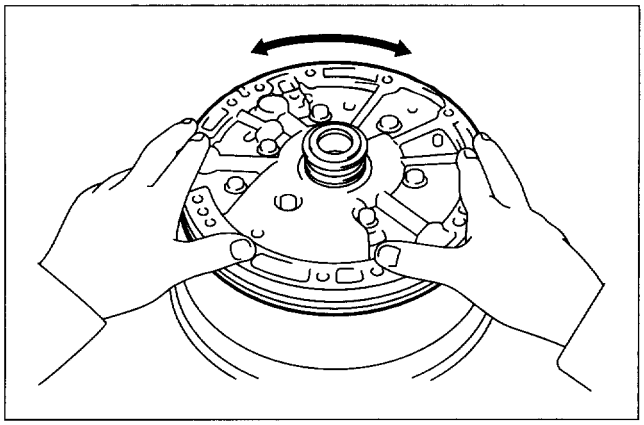

Figure 78. Drive Gear Rotation Check

OVERDRIVE PLANETARY GEAR AND DIRECT CLUTCH

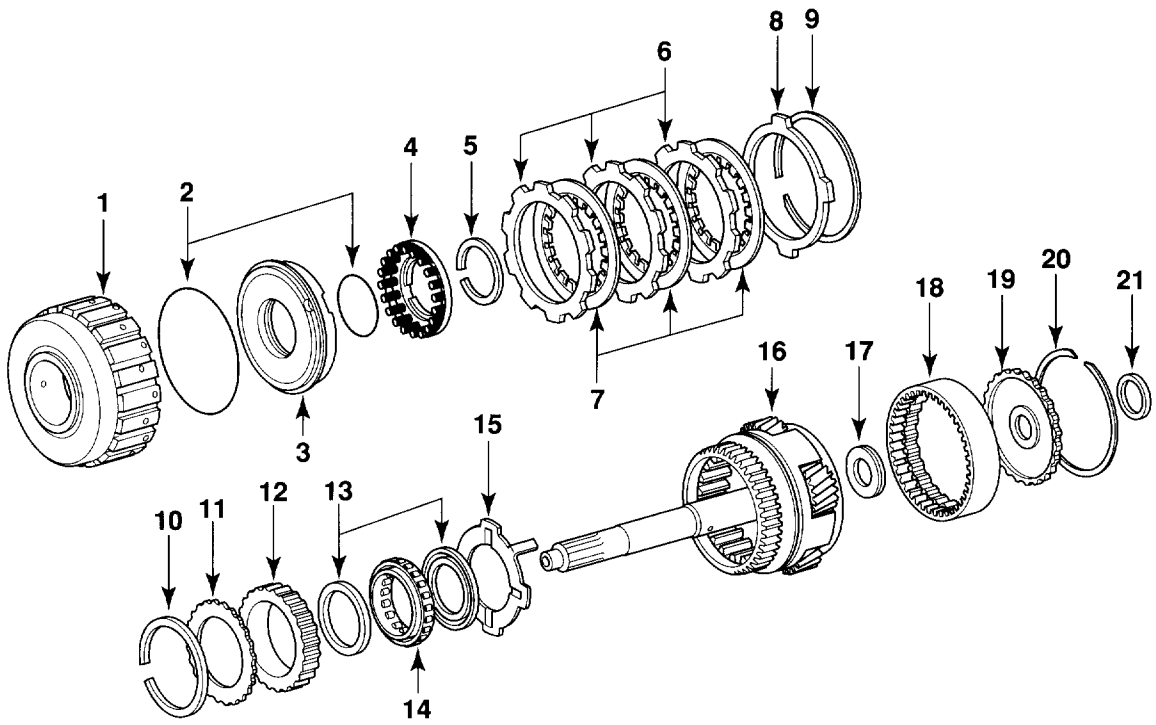

1. O/D Direct Clutch Drum
2. O-ring
3. O/D Direct Clutch Piston
4. Piston Return Spring
5. Snap Ring
6. Plate
7. Disc
8. Flange
9. Snap Ring
10. Snap Ring
11. Thrust washer
12. One-way Clutch Outer Race
13. Retainer
14. One-way Clutch
15. Thrust Washer
16. O/D Planetary Gear
17. Thrust Washer
18. Planetary Ring Gear
19. Ring Gear Flange
20. Snap Ring
21. Oil Seal Ring

Figure 79. O/D Planetary Gear and Direct Clutch Assembly

Disassemble

1. Check operation of one-way clutch.
   Hold the O/D direct clutch drum and turn the input shaft.
   The input shaft should turn freely clockwise and should lock counterclockwise.

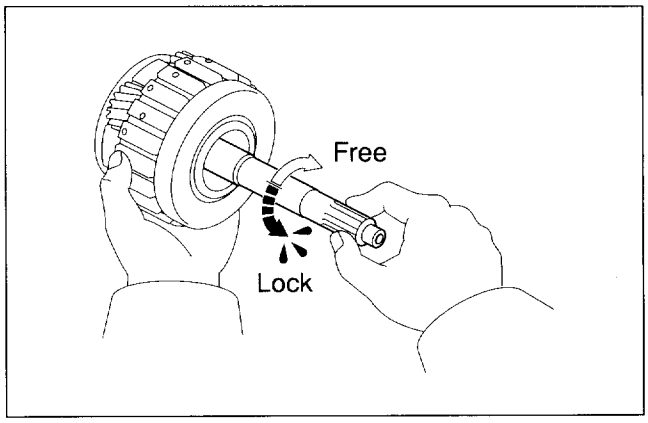

Figure 80. One-way Clutch Operation

2. Remove overdrive direct clutch assembly from overdrive planetary gear.

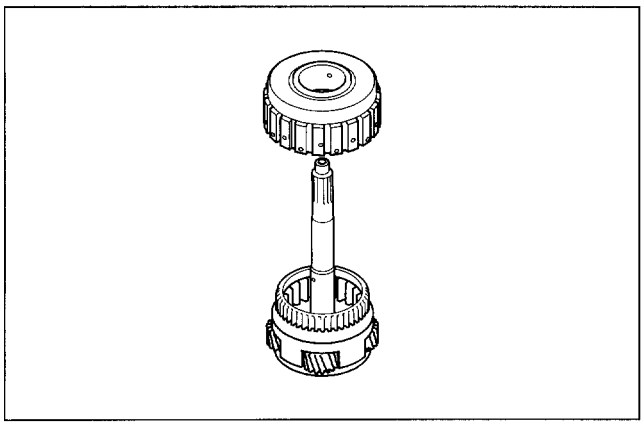

Figure 81. O/D Direct Clutch Removal

3. Check piston stroke of overdrive direct clutch. Place the oil pump onto the torque converter, and then place the O/D direct clutch assembly onto the oil pump.

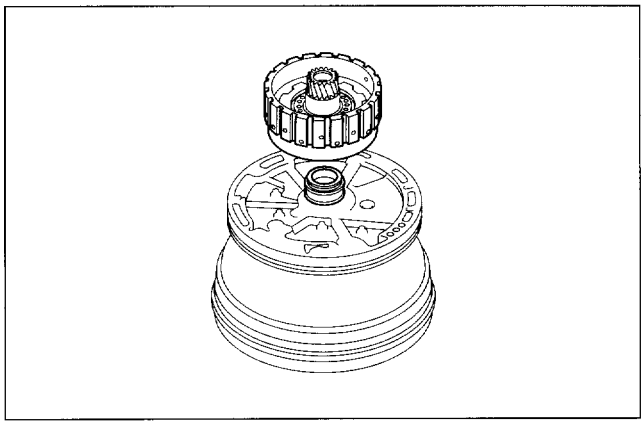

Figure 82. Piston Stroke Check (1)

Using No.1 measure terminal and a dial indicator, measure the piston stroke by applying and releasing compressed air 392–785 kPa (4–8 kg/cm², 57–114 psi).
Tool Required:
5-8840-2649-0 No.1 measure terminal
NOTICE:
- **Stand the measure terminal on the piston vertically.**
- **Ensure that the measure terminal does not touches other parts than the piston.**
- **Measure the stroke at more than 3 points.**

Piston stroke: 1.80–2.07 mm (0.0709–0.0815 in.)
If the piston stroke is not as specified, inspect the discs and the plates.

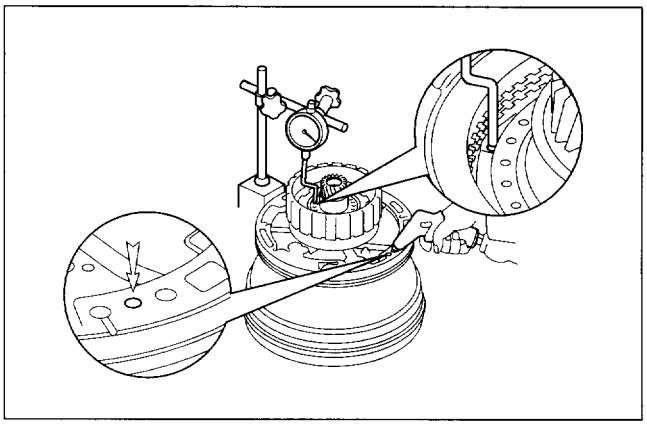

Figure 83. Piston Stroke Check (2)

4. Remove flange, plates and discs
Using a screwdriver, remove the snap ring.

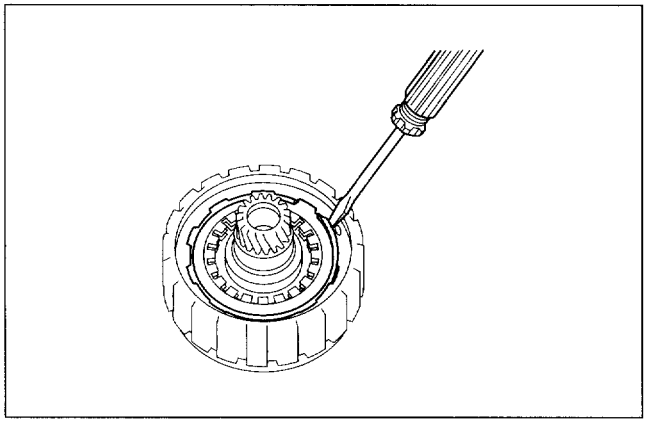

Figure 84. Snap Ring Removal

Remove the flange, 3 discs and 3 plates.

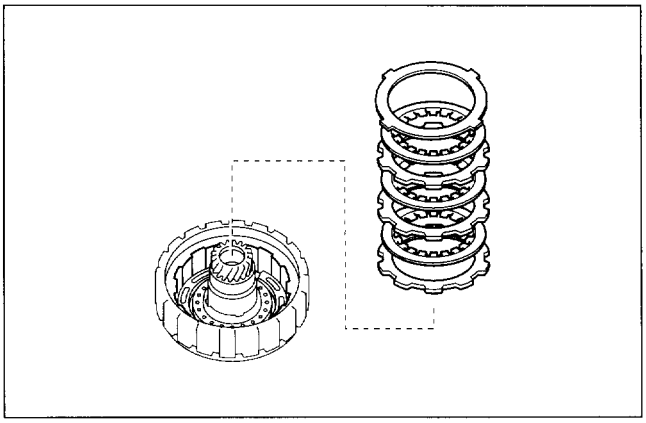

Figure 85. Disc and Plate Removal

5. Remove piston return spring.
Place No.2 piston spring compressor on the spring seat, and compress the return spring with a shop press.
Tool Required:
5-8840-2641-0 No.2 Piston Spring Compressor

NOTICE: Stop compressing the return spring at the position 1 to 2 mm away from the snap ring to prevent the spring sheet from being deformed.

Using snap ring pliers, remove the snap ring.

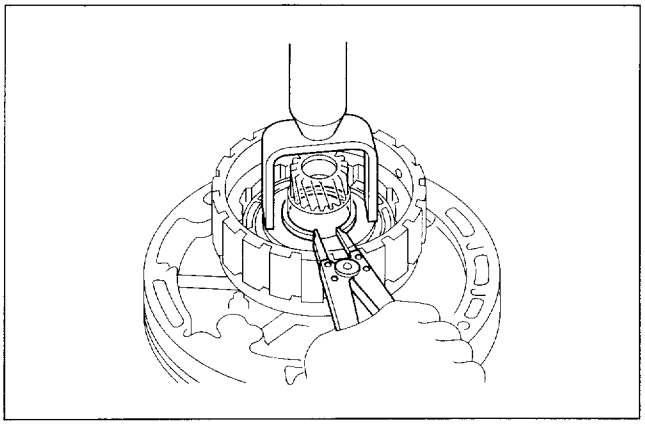

Figure 86. Piston Return Spring Removal (1)

6. Remove the piston return spring.

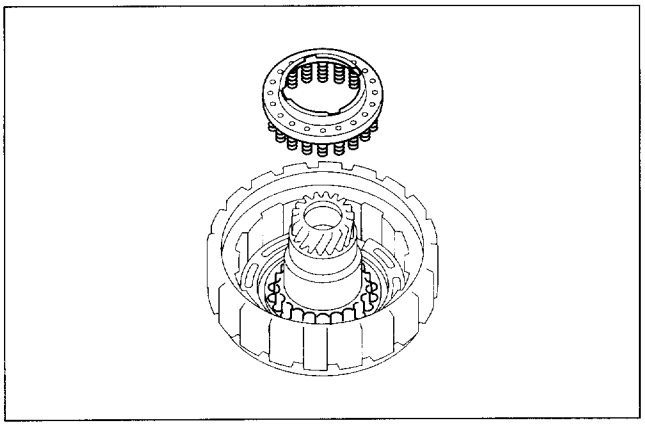

Figure 87. Piston Return Spring Removal (2)

7. Remove overdrive direct clutch piston.
   Place the oil pump onto the torque converter, and then place the O/D direct clutch onto the oil pump.
   Hold the clutch piston with hand, apply compressed air into the oil hole of the oil pump to remove the clutch piston.
   Remove the 2 O-rings from the clutch piston.

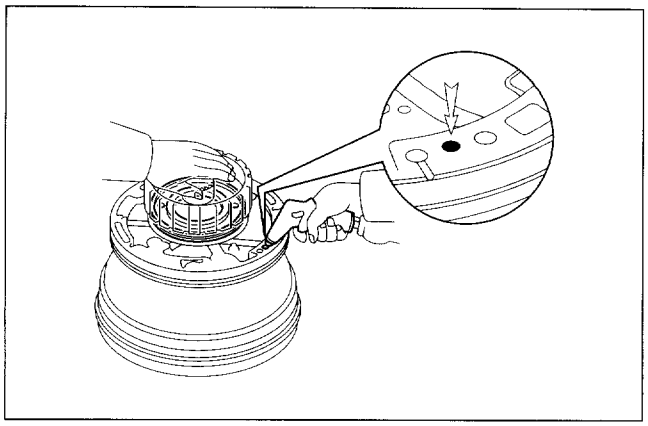

Figure 88. O/D Direct Clutch Piston Removal

8. Remove oil seal ring from ring gear flange.

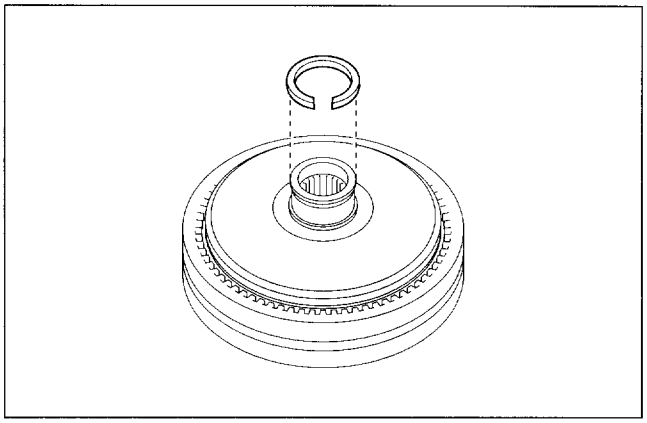

Figure 89. Oil Seal Ring Removal

9. Remove ring gear flange.
   Using a small screwdriver, remove the snap ring.

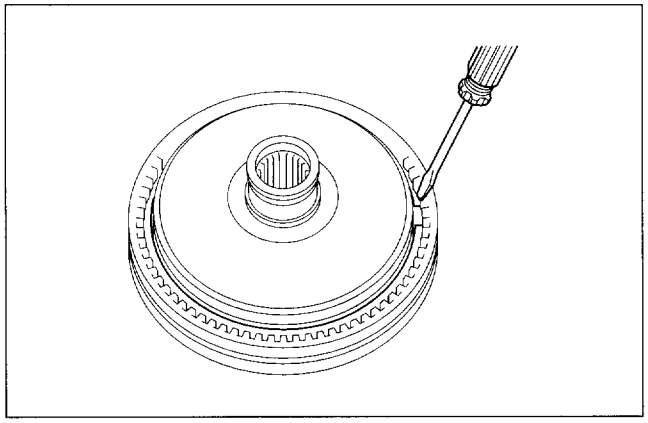

Figure 90. Snap Ring Removal

10. Remove the ring gear flange.

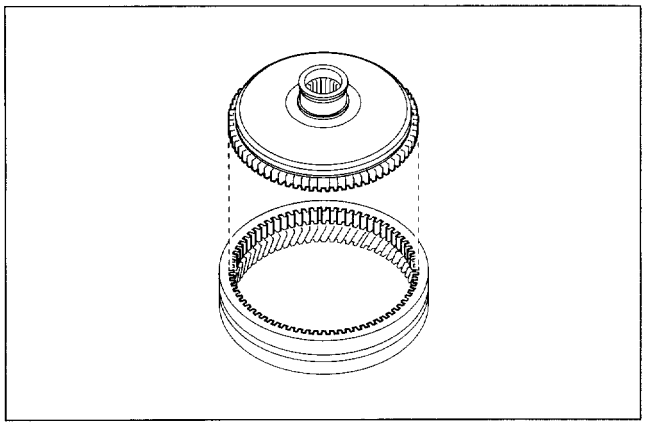

Figure 91. Ring Gear Flange Removal

11. Remove one-way clutch from overdrive planetary gear.
    Using small screwdriver, remove the snap ring.

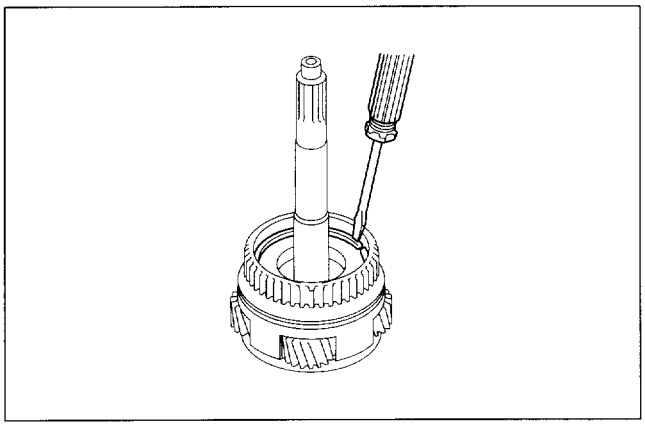

Figure 92. Snap Ring Removal

12. Remove the thrust washer.

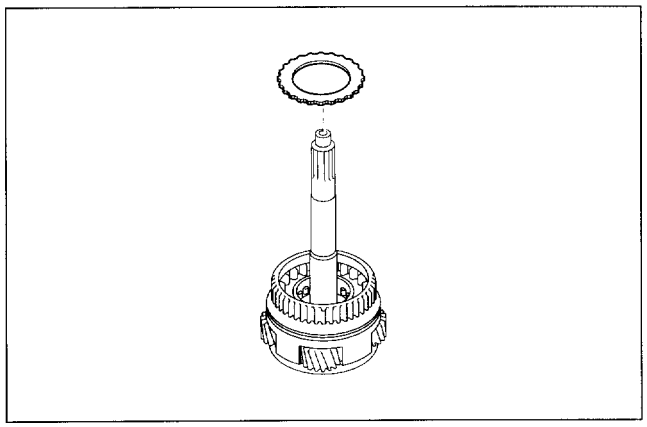

Figure 93. Thrust Washer Removal

13. Remove the one-way clutch together with the outer race.
    NOTICE: Check the installation direction of the one-way clutch.

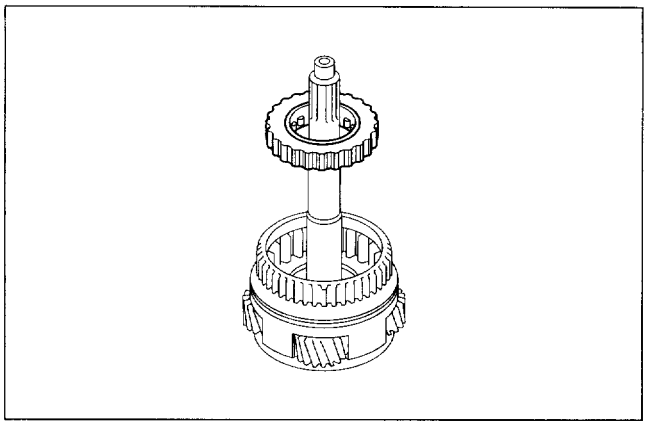

Figure 94. One-way Clutch and Outer Race Removal

14. Remove the thrust washer.
    NOTICE: Check the installation direction of the thrust washer.

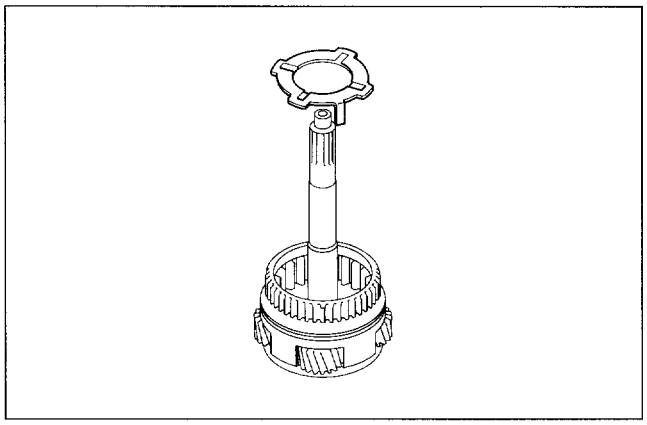

Figure 95. Thrust Washer Removal

15. Remove the one-way clutch from the outer race.
    NOTICE: Do not remove the upper and lower plates of the one-way clutch.

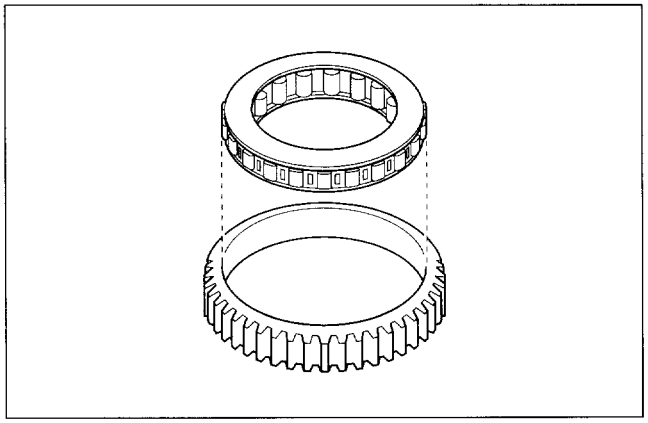

Figure 96. One-way Clutch Removal

Inspect

1. Inspect discs, plates and flange.
   Check to see if the sliding surface of the disc, plate and flange are worn or burnt. If necessary, replace them.
   NOTICE:
   - **If the lining of the disc is peeling off or discolored, or even if a part of the printed numbers are defaced, replace all discs.**
   - **Before assembling new discs, soak them in ATF for at least 15 minutes.**

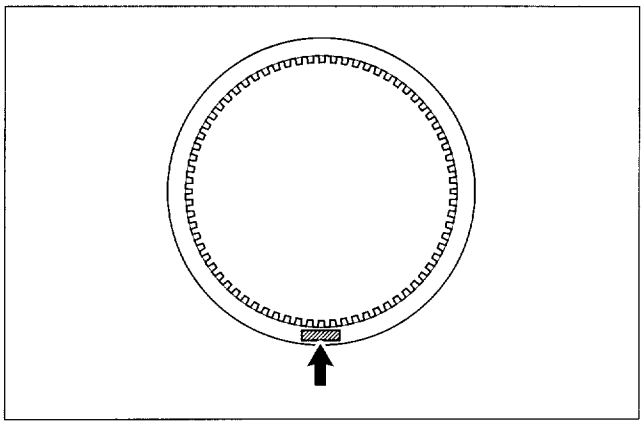

Figure 97. Disc Inspection

2. Inspect overdrive direct clutch piston.
   Check that check ball is free by shaking the piston.
   Check that the valve does not leak by applying low pressure compressed air.

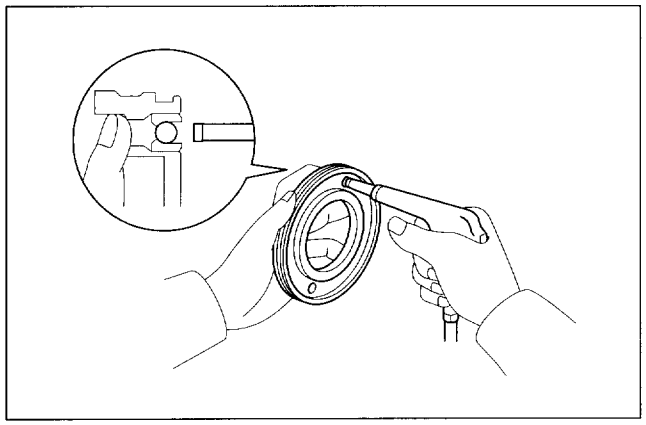

Figure 98. Valve Leakage Check

3. Inspect bushings of overdrive direct clutch drum.
   Using a dial indicator, measure the inside diameter.
   Standard inside diameter: 26.500–26.521 mm (1.0433–1.0441 in.)
   Maximum inside diameter: 26.57 mm (1.0461 in.)
   NOTICE: Measure at several points and take the average value.
   If the inside diameter is greater than maximum, replace the clutch drum.
   Inspect the bushing contacting surface of the planetary gear input shaft, when discoloration or damage on the surface is found, replace the planetary gear.

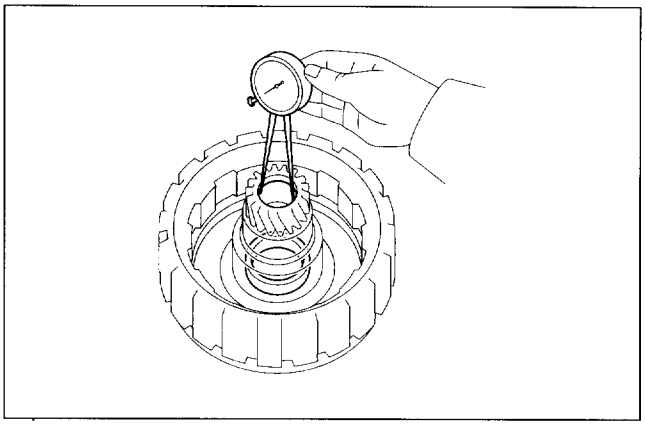

Figure 99. O/D Direct Clutch Drum Inspection

4. Inspect bushings of overdrive planetary gear.
   Using a dial indicator, measure the inside diameter.
   Standard inside diameter: 12.000–12.018 mm (0.4724–0.4731 in.)
   Maximum inside diameter: 12.070 mm (0.4752 in.)
   NOTICE: Measure at several points and take the average value.
   If the inside diameter is greater than maximum, replace the planetary gear.
   Inspect the bushing contacting surface of the front clutch drum input shaft, when discoloration or damage on the surface is found, replace the front clutch drum.

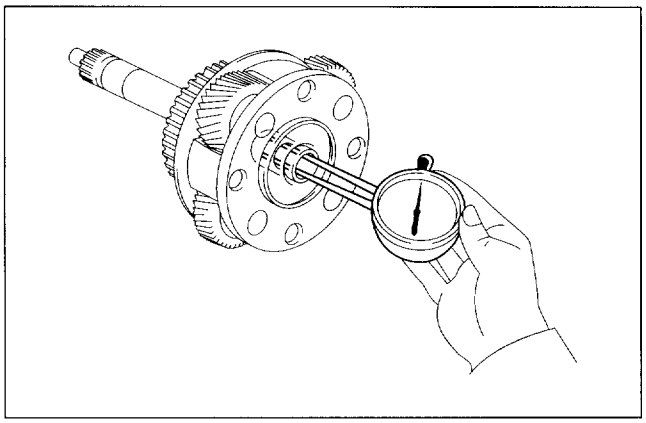

Figure 100. O/D Planetary Gear Inspection

5. Inspect planetary pinion gear thrust clearance. Using a feeler gauge, measure the clearance between the pinions and carrier.
   Standard clearance: 0.20–0.59 mm (0.0079–0.0232 in.)
   Maximum clearance: 0.80 mm (0.0315 in.)
   If the thrust clearance is greater than maximum, replace the planetary gear.

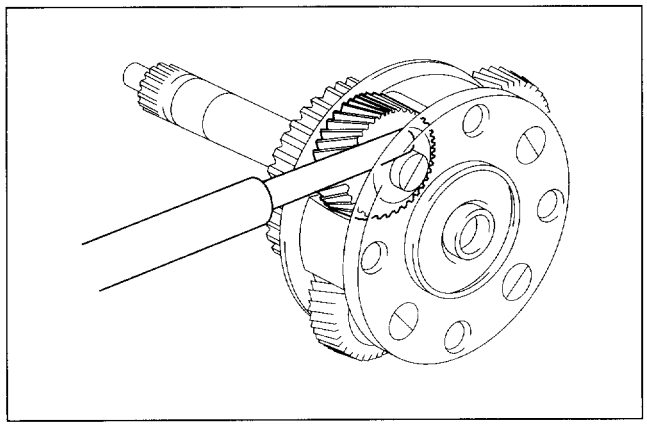

Figure 101. Thrust Clearance Check

Assemble

1. Install one-way clutch to overdrive planetary gear.
   a) Install the one-way clutch into the outer race.

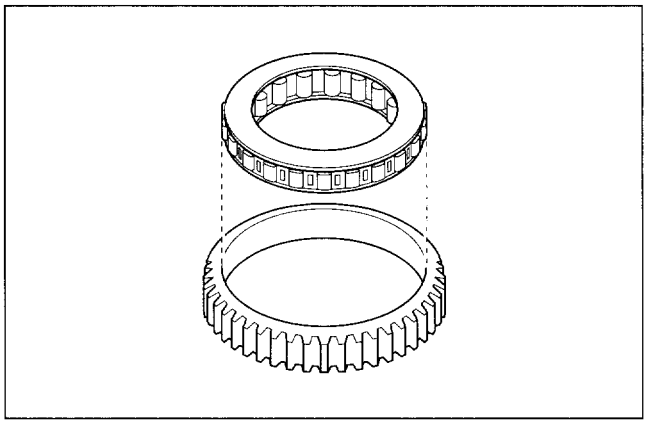

Figure 102. One-way Clutch Installation

   b) Install the thrust washer, facing the grooved side upward.

NOTICE: Insert the pin of thrust washer into holes in the O/D planetary gear.

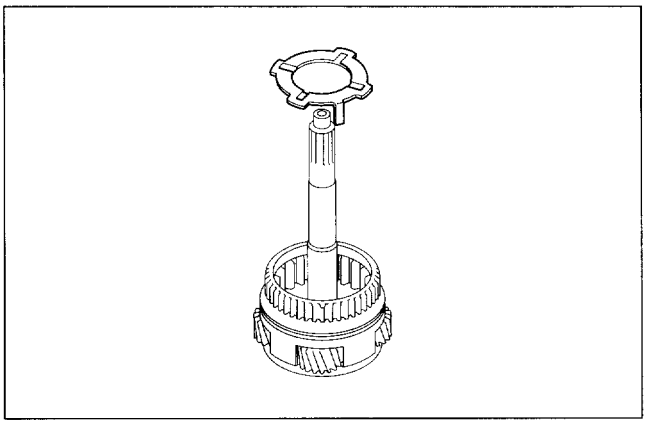

Figure 103. Thrust Washer Installation

   c) Install the one-way clutch and outer race assembly, facing the flanged side of the one-way clutch upward.

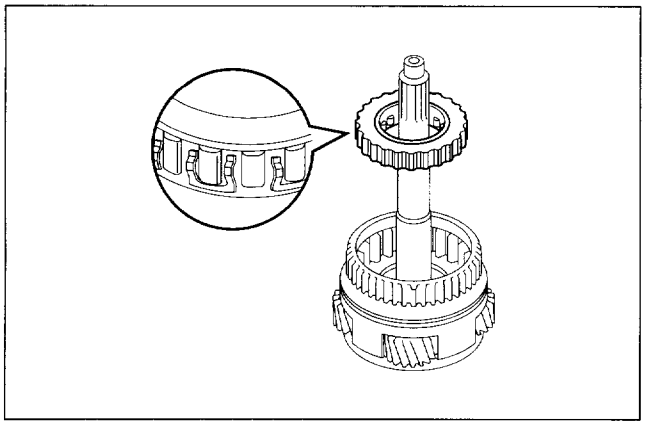

Figure 104. One-way Clutch Direction

d) Install the thrust washer.

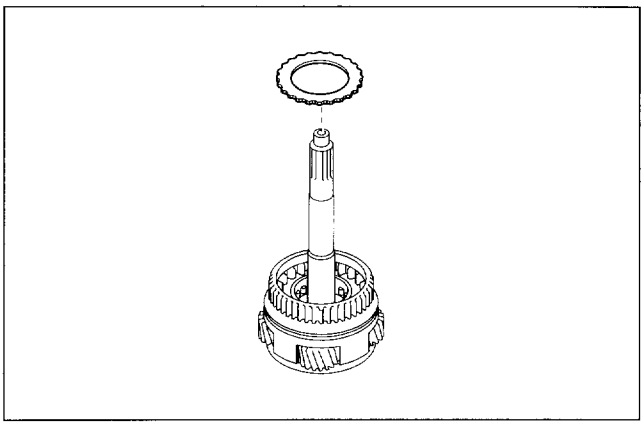

Figure 105. Thrust Washer Installation

e) Using a screwdriver, install the snap ring.

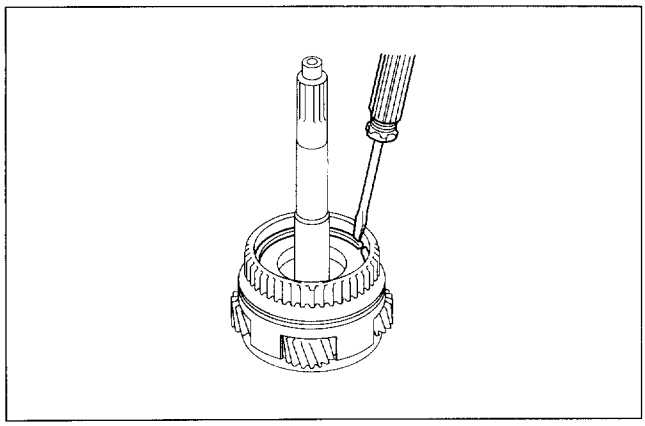

Figure 106. Snap Ring Installation

2. Install ring gear flange to overdrive planetary ring gear.
   a) Install the ring gear flange as shown.

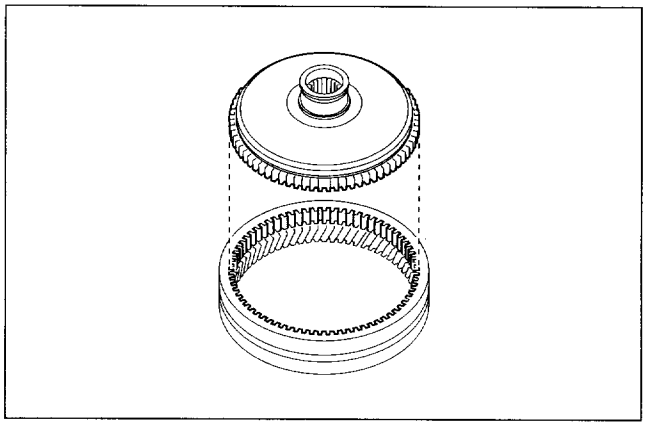

Figure 107. Ring Gear Flange Installation

b) Using a screwdriver, install the snap ring.

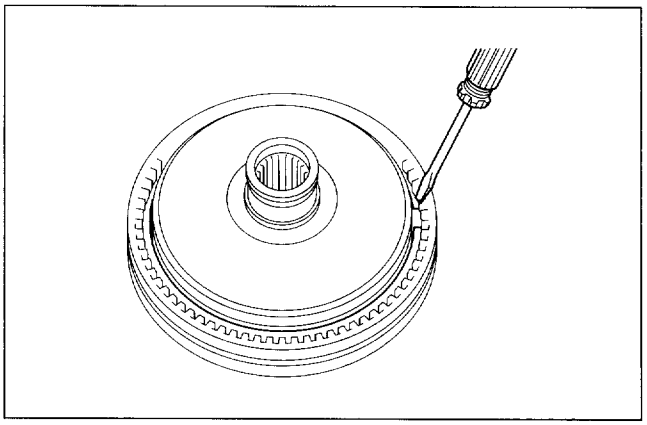

Figure 108. Snap Ring Installation

3. Install oil seal ring.
   Coat the oil seal ring with ATF, and install it to the ring gear flange, then sank it down by squeezing their ends together.
   CAUTION: Do not spread the ring ends more than necessary.
   NOTICE: After installing the oil seal ring, check that it moves smoothly.

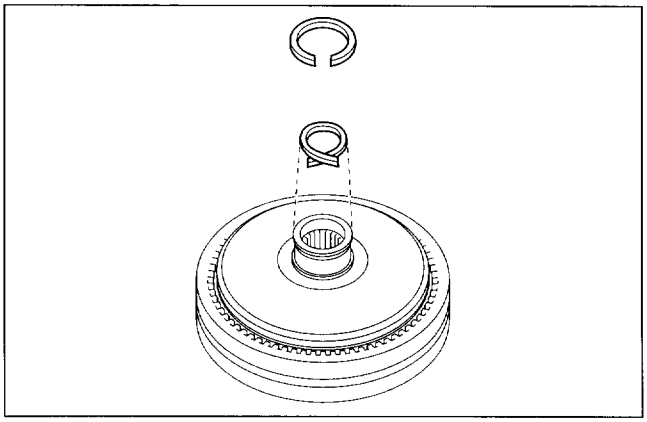

Figure 109. Oil Seal Ring Installation

4. Install overdrive direct clutch piston.
   a) Coat new O-rings with ATF, and install them on the clutch piston.

O-ring diameters mm (in.)

	Inside	Wire diameter
Inner side	64.1 (2.524)	2.6 (0.102)
Outer side	117.4 (4.6227)	3.1 (0.122)

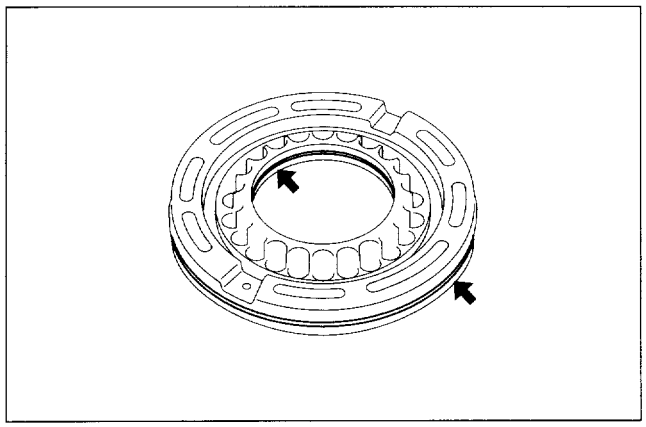

Figure 110. O-ring Location

   b) Push in the clutch piston into the clutch drum with both hands.

CAUTION: Be careful not to damage the O-rings.
NOTICE: Push in the piston uniformly.

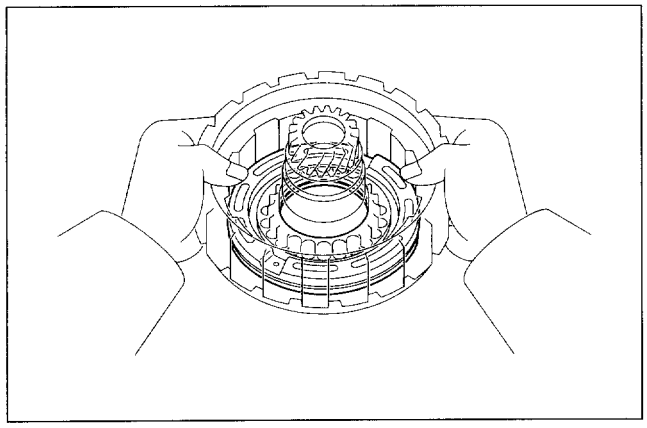

Figure 111. Clutch Piston Installation

5. Install piston return spring.
   a) Place the piston return spring on the clutch piston.

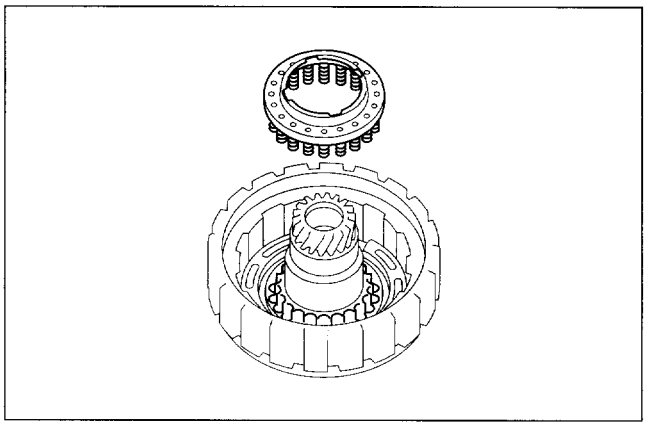

Figure 112. Return Spring Installation (1)

   b) Place No.2 piston spring compressor on the spring seat, and compress the return spring with a shop press.

Tool Required:
5-8840-2641-0 No.2 Piston Spring Compressor

NOTICE: Stop compressing the return spring at the position 1 to 2 mm away from the snap ring to prevent the spring sheet from being deformed.

   c) Using snap ring pliers, install the snap ring.

NOTICE: Be sure the end gap of the snap ring is not aligned with the spring retainer claw.

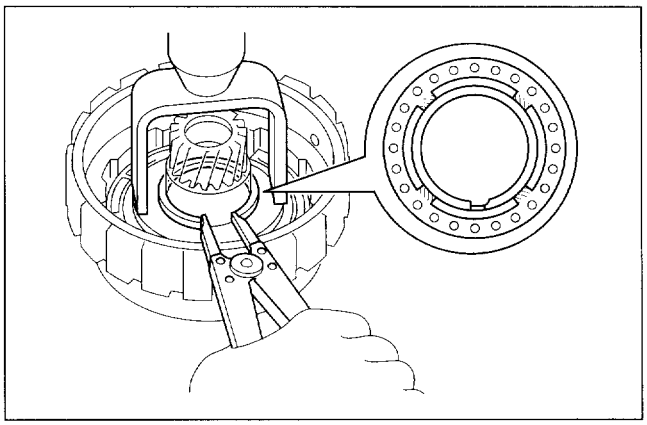

Figure 113. Return Spring Installation (2)

6. Install plates, discs and flange.
   a) Install the 3 plates and 3 discs in order:
      P = Plate D = Disc
      P – D – P – D – P – D

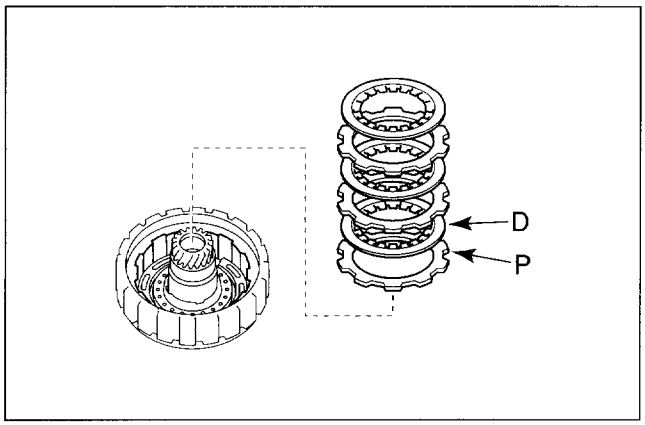

Figure 114. Plate and Disc Installation

b) Install the flange, facing the rounded edge upward.

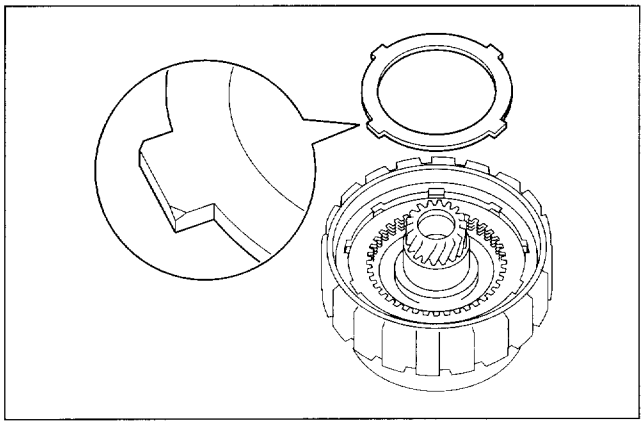

Figure 115. Flange Direction

c) Using a screwdriver, install the snap ring.
NOTICE: Be sure the end gap of the snap ring is not aligned with the cutout portion of the clutch drum.

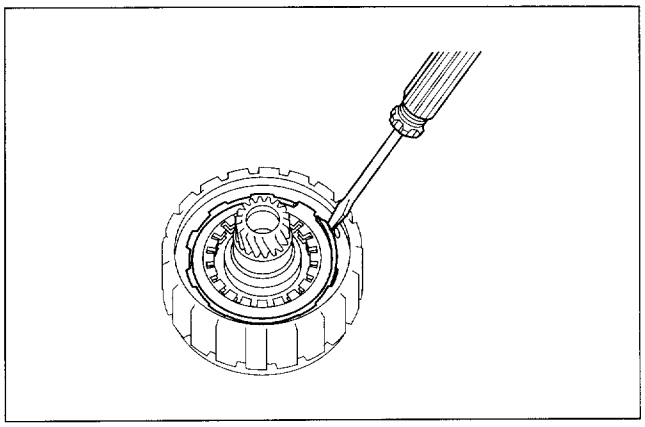

Figure 116. Snap Ring Installation

7. Check piston stroke of overdrive direct clutch.
   a) Place the oil pump onto the torque converter, and then place the O/D direct clutch assmebly onto the oil pump.

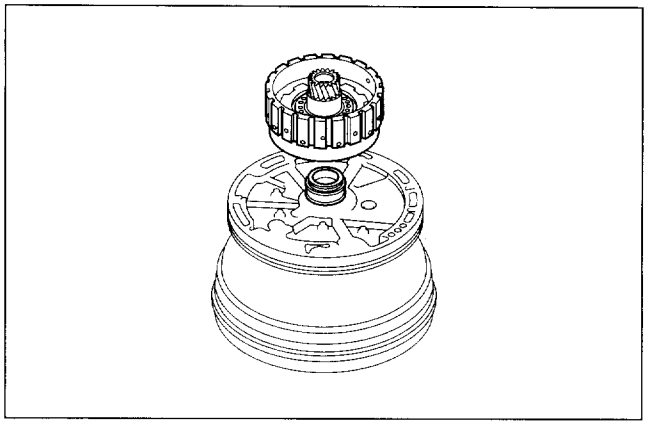

Figure 117. Piston Stroke Check (1)

b) Using No.1 measure terminal and a dial indicator, measure the piston stroke by applying and releasing compressed air 392–785 kPa (4–8 kg/cm², 57–114 psi).

Tool Required:
5-8840-2649-0 No.1 Measure Terminal

NOTICE:
- **Stand the measure terminal on the piston vertically.**
- **Ensure that the measure terminal does not touches other parts than the piston.**
- **Measure the stroke at more than 3 points.**

Piston stroke: 1.80–2.07 mm (0.0709–0.0815 in.)

If the piston stroke is less than specified, parts may have been assembled incorrectly, check and reassemble again.

If the piston stroke is not as specified, select another flange.

NOTICE: There are 4 different thicknesses for flange.

Flange thicknesses mm (in.)

No.	Thickness	No.	Thickness
A	4.6 (0.181)	C	4.94 (0.194)
B	4.77 (0.188)	D	5.11 (0.201)

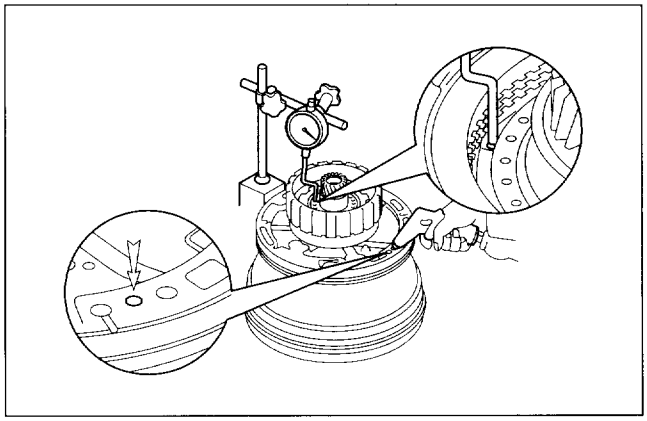

Figure 118. Piston Stroke Check (2)

8. Install overdrive direct clutch assembly.
   Install the direct clutch assembly onto the O/D planetary gear.
   NOTICE: Mesh the spline of the O/D planetary gear with the flukes of the discs by rotating and pushing the O/D direct clutch counterclockwise.

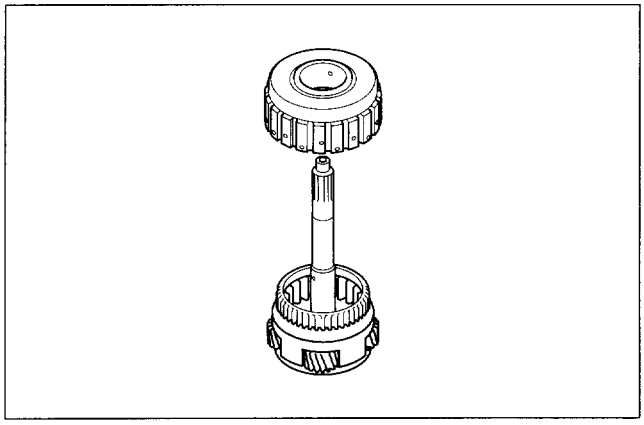

Figure 119. O/D Clutch Installation

9. Check operation of one-way clutch
   Hold the O/D direct clutch drum and turn the input shaft.
   The input shaft should turn freely clockwise and should lock counterclockwise.

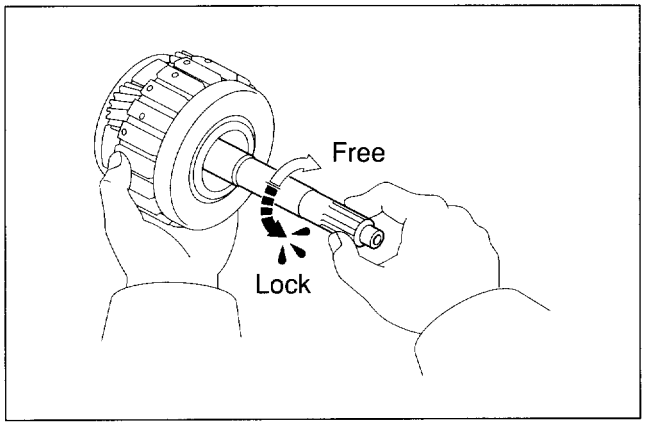

Figure 120. One-way Clutch Operation

OVERDRIVE BRAKE

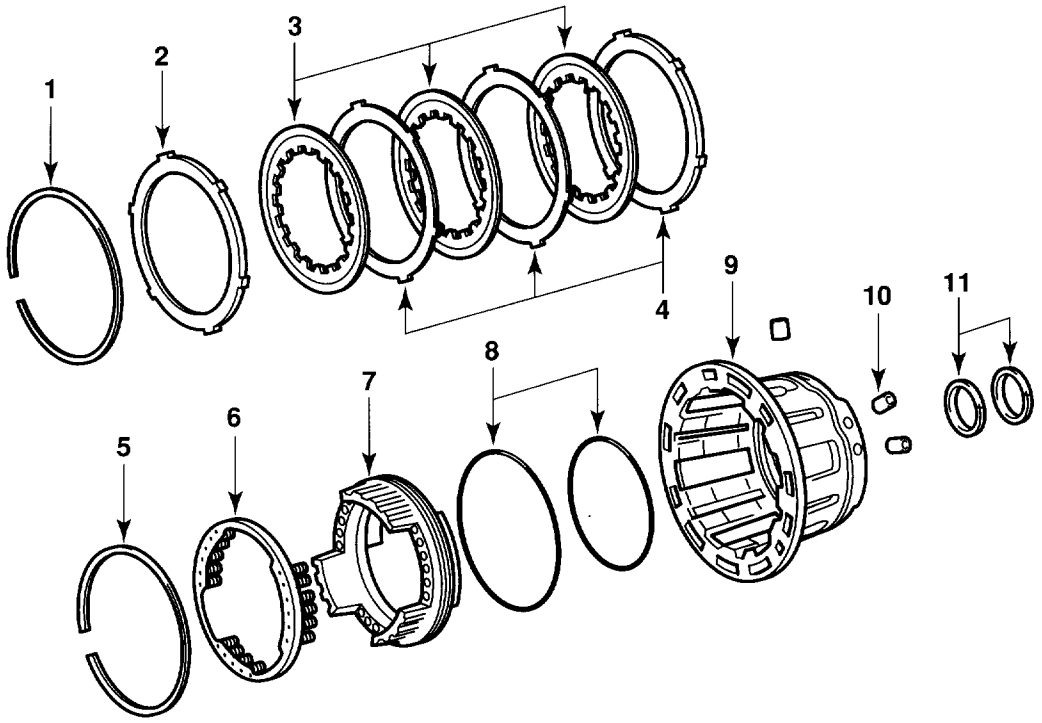

1. Snap Ring
2. Flange
3. Disc
4. Plate
5. Snap Ring
6. Piston Return Spring
7. O/D Brake Piston
8. O-ring
9. O/D Case
10. Ring Retainer
11. Oil Seal Ring

Figure 121. O/D Brake Assembly

Disassemble

1. Check piston stroke of overdrive brake.
   a) Place the O/D case assembly onto the front clutch assembly.

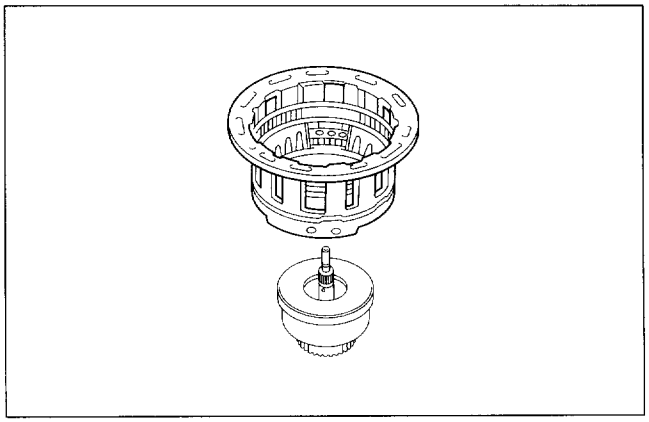

Figure 122. Piston Stroke Check (1)

b) Using No.2 measure terminal and a dial indicator, measure the piston stroke by applying and releasing compressed air 392–785 kPa (4–8 kg/cm², 57–114 psi).

Tool Required:
5-8840-2650-0 No.2 Measure Terminal

Piston stroke: 1.25–1.85 mm (0.0492–0.0728 in.)

NOTICE:
- **Stand the measure terminal on the piston vertically.**
- **Ensure that the measure terminal does not touches other parts than the piston.**
- **Measure the stroke at more than 3 points.**

If the piston stroke is not as specified, inspect the discs and plates.

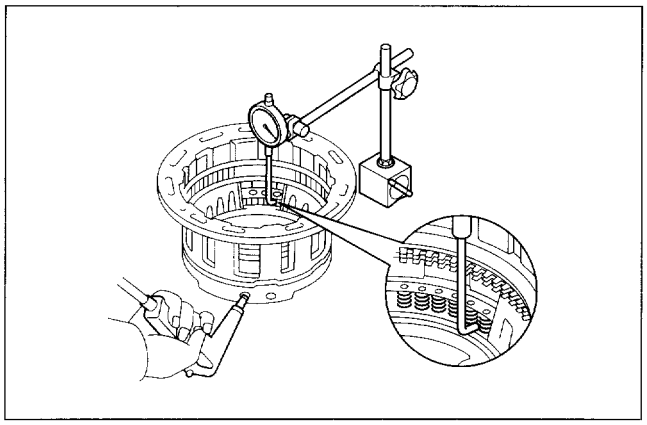

Figure 123. Piston Stroke Check (2)

2. Remove flange, discs and plates.
   a) Using a screwdriver, remove the snap ring.
   b) Remove the flange, 3 discs and 3 plates.

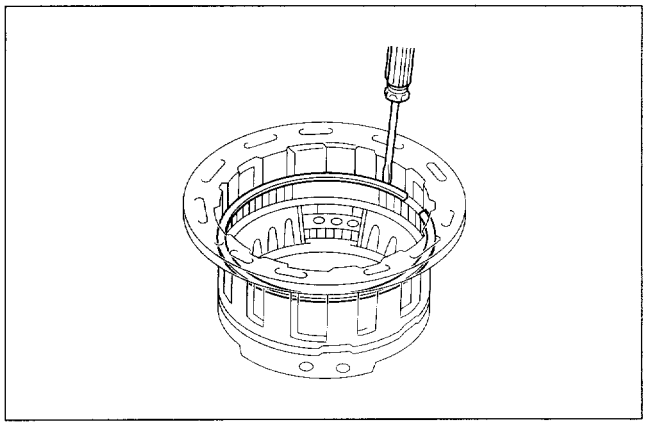

Figure 124. Snap Ring Removal

3. Remove piston return spring.
   a) Place No.3 piston spring compressor on the spring seat, and compress the return spring with a shop press.

   Tool Required:
   5-8840-2642-0 No.3 Piston Spring Compressor

   b) Using screwdriver, remove the snap ring.

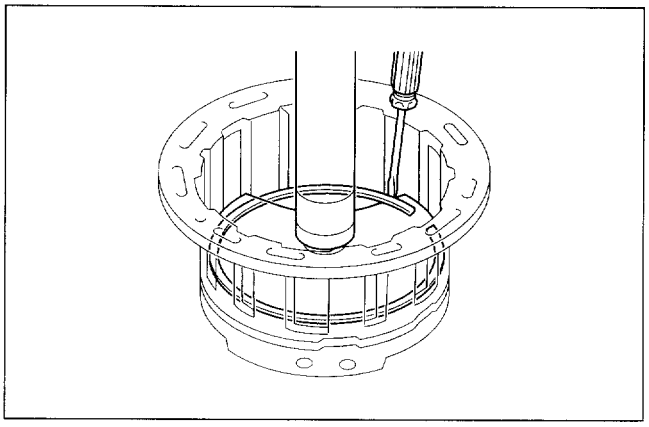

Figure 125. Return Spring Removal (1)

   c) Remove the return spring.

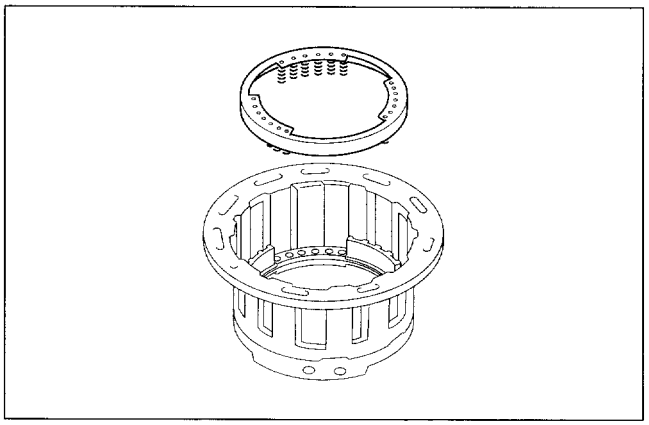

Figure 126. Return Spring Removal (2)

4. Remove overdrive brake piston
   Place the No.3 piston spring compressor on the brake piston.
   Hold piston spring compressor so it does not slant, and apply compressed air 392–785 kPa (4–8 kg/cm², 57–114 psi) into the oil hole of the O/D case to remove the brake piston.
   Remove the 2 O-rings from the brake piston.

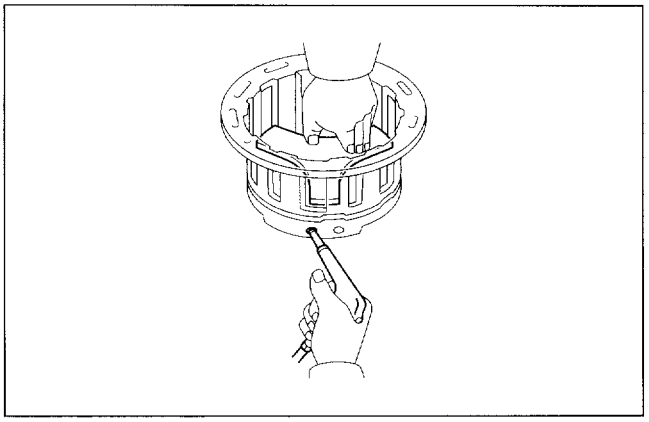

Figure 127. Brake Piston Removal

5. Remove the 2 oil seal rings from the O/D case.

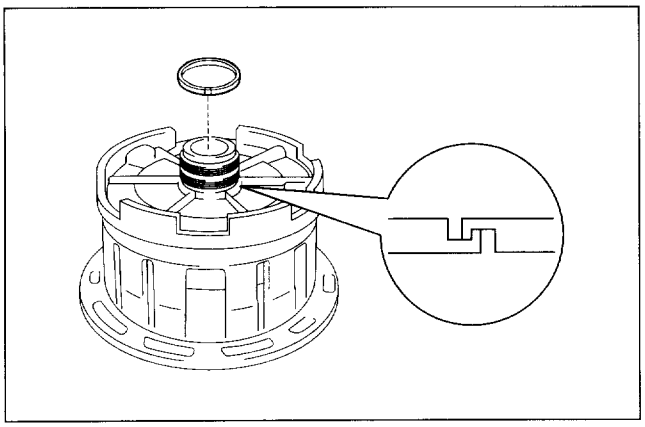

Figure 128. Oil Seal Ring Removal

6. Remove ring retainers.
   Using needle nose pliers, remove the 3 ring retainers from the oil holes of O/D case.

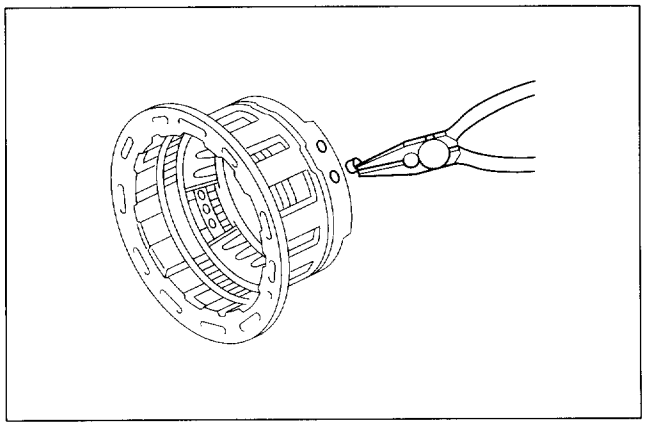

Figure 129. Ring Retainer Removal

Inspect

1. Inspect discs, plates and flange.
   Check to see if the sliding surface of the disc, plate and flange are worn or burnt. If necessary, replace them.
   NOTICE:
   - **If the lining of the disc is peeling off or discolored, or even if a part of the printed numbers are defaced, replace all discs.**
   - **Before assembling new discs, soak them in ATF for at least 15 minutes.**

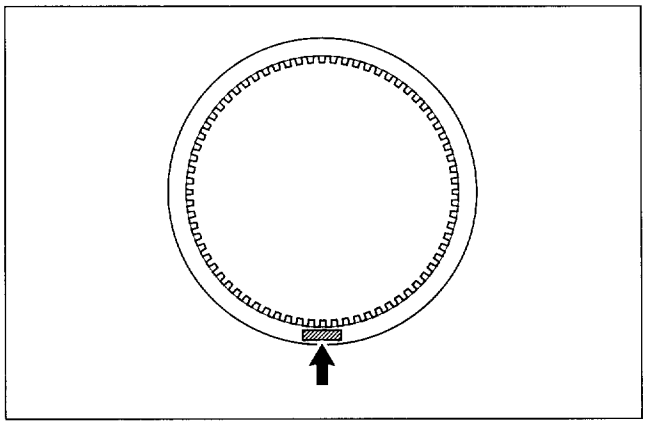

Figure 130. Disc Inspection

2. Inspect bushing of overdrive case.
   Using a dial indicator, measure the inside diameter.
   Standard inside diameter: 33.10–33.15 mm (1.3031–1.3051 in.)
   Maximum inside diameter: 33.20 mm (1.3071 in.)
   NOTICE: Measure at several points and take the average value.
   If the inside diameter is greater than maximum, replace the O/D case.
   Inspect the bushing contacting surface of the front clutch drum input shaft and the planetary ring gear flange, when discoloration or damage on the surface is found, replace the front clutch drum and planetary ring gear flange.

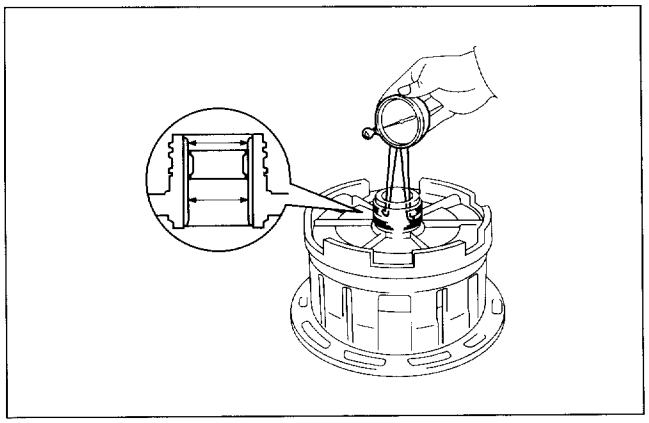

Figure 131. O/D Case Inspection

Assemble

1. Install ring retainers.
   Coat the new 3 ring retainers with ATF.
   Using needle nose pliers, install the 3 ring retainers into the oil holes of the O/D case.

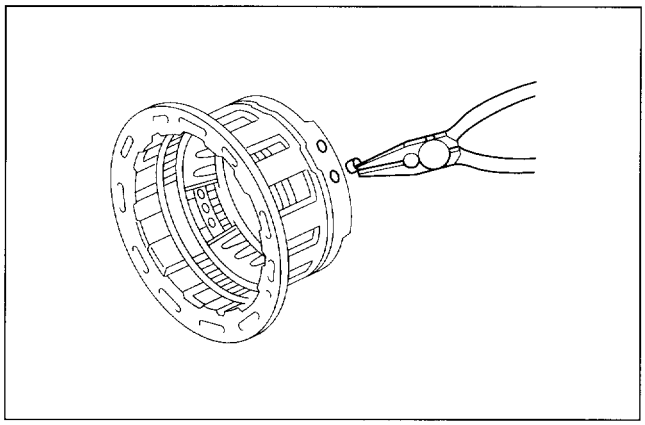

Figure 132. Ring Retainer Installation

2. Install oil seal rings.
   Coat the new 2 oil seal rings with ATF.
   Contract the oil seals, and install them onto the O/D case.
   CAUTION:
   - **Do not damage the claws on the oil seal rings.**
   - **Do not spread the ring ends more than necessary.**

   NOTICE: After installing the oil seal rings, check that they rotate smoothly.

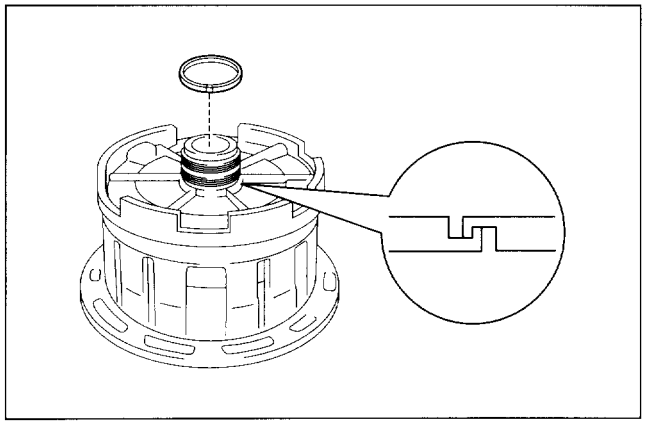

Figure 133. Oil Seal Ring Installation

3. Install overdrive brake piston.
   a) Coat new 2 O-rings with ATF, and install them on the brake piston.

O-ring diameters mm (in.)

	Inside	Wire diameter
Inner side	145.3 (5.7)	3.1 (0.1)
Outer side	163.7 (6.4)	3.1 (0.1)

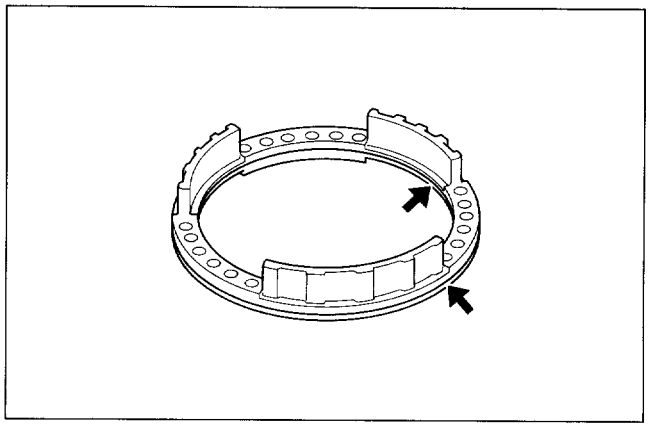

Figure 134. O-ring Location

   b) Align the protrusions of the brake piston with the grooves of the O/D case.
   c) Push in the brake piston into the O/D case with both hands.

   CAUTION: Be careful not to damage the O-rings.
   NOTICE: Push in the piston uniformly.

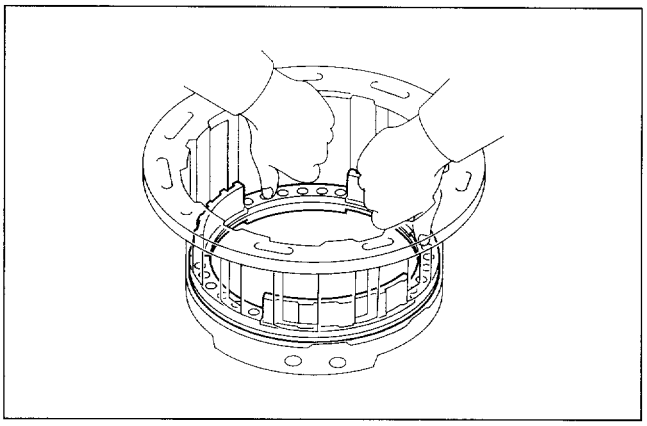

Figure 135. Brake Piston Installation

4. Install piston return spring.
   a) Place the return spring on the brake piston.

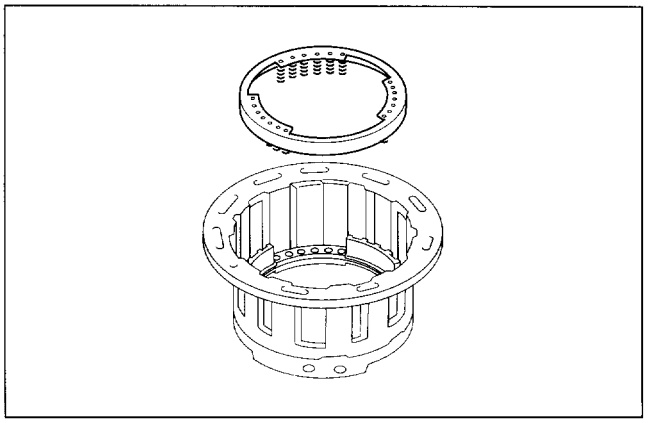

Figure 136. Return Spring Installation (1)

b) Place No.3 piston spring compressor on the spring on the spring seat, and compress the return spring with a shop press.

Tool Required:

5-8840-2642-0 No.3 Piston Spring Compressor

NOTICE: Stop compressing the return spring at the position 1 to 2 mm away from the snap ring to prevent the spring sheet from being deformed.

c) Using a screwdriver, install the snap ring.

NOTICE: Be sure the end gap of the snap ring is not aligned with the cutout portion of the O/D case.

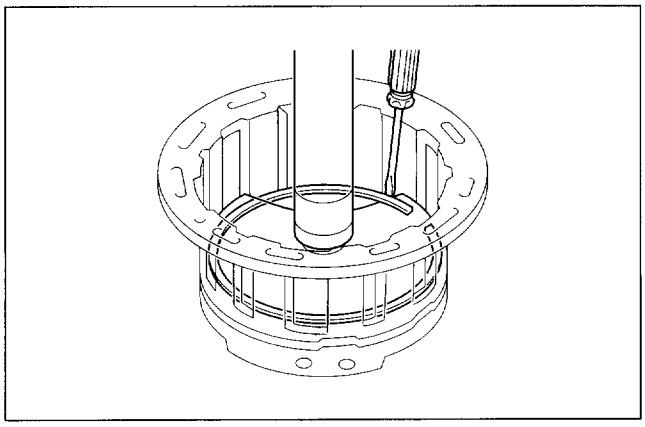

Figure 137. Return Spring Installation (2)

5. Install plates, discs and flange.
   a) Install the 3 plates and 3 discs in order:
      P = Plate D = Disc
      P – D – P – D – P – D

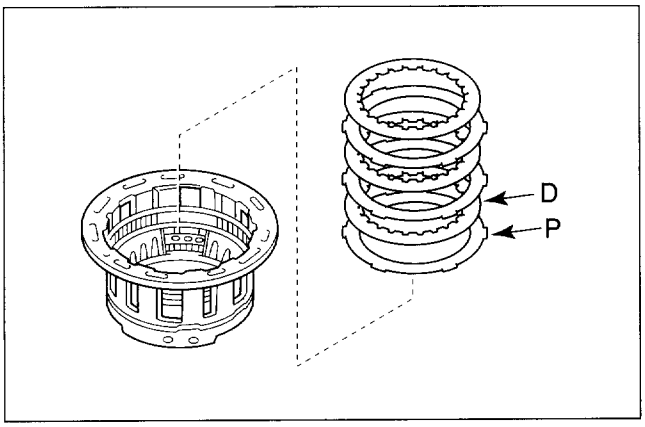

Figure 138. Plate, Disc and Flange Installation

   b) Install the flange, facing the rounded edge upward.

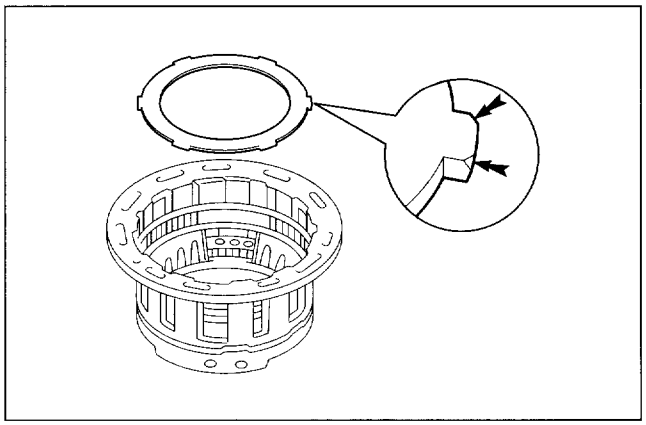

Figure 139. Flange Direction

   c) Using a screwdriver, install the snap ring.

NOTICE: Be sure the end gap of the snap ring is not aligned with the cutout portion of the O/D case.

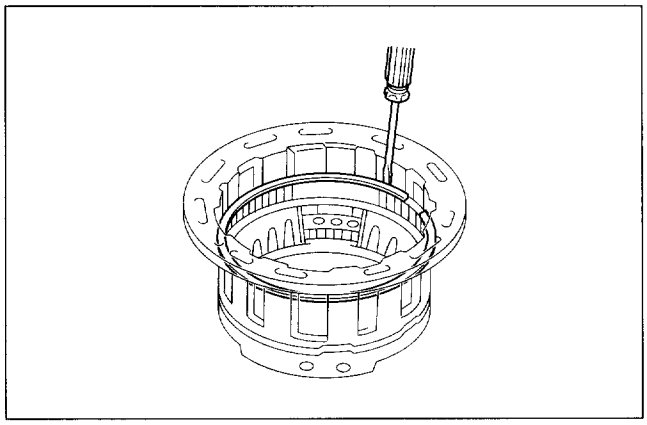

Figure 140. Snap Ring Installation

6. Check piston stroke of overdrive brake.
   a) Place the O/D case assembly onto the front clutch assembly.

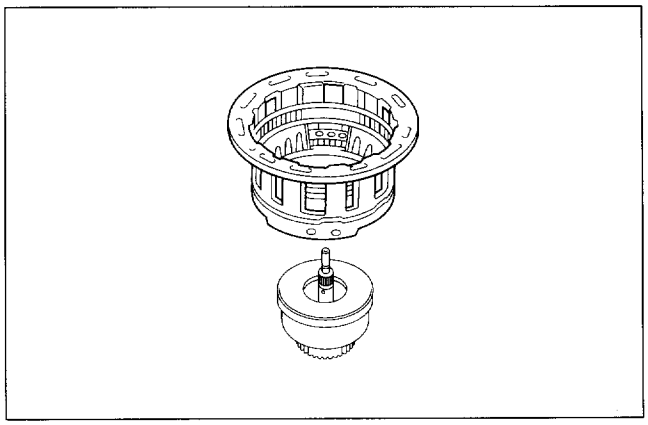

Figure 141. Piston Stroke Check (1)

b) Using No.2 measure terminal and a dial indicator, measure the piston stroke by applying and releasing compressed air 392–785 kPa (4–8 kg/cm², 57–114 psi).

Tool Required:

5-8840-2650-0 No.2 Measure Terminal

Piston stroke: 1.25–1.85 mm (0.0492–0.0728 in.)

NOTICE:

- **Stand the measure terminal on the piston vertically.**
- **Ensure that the measure terminal does not touches other parts than the piston.**
- **Measure the stroke at more than 3 points.**

If the piston stroke is less than specified, parts may have been assembled incorrectly, check and reassemble again.

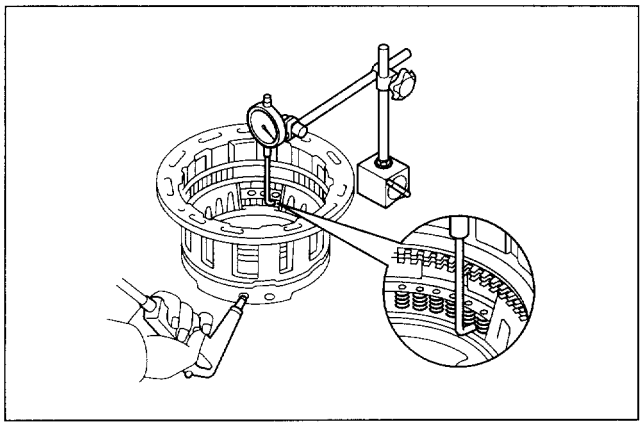

Figure 142. Piston Stroke Check (2)

FRONT CLUTCH

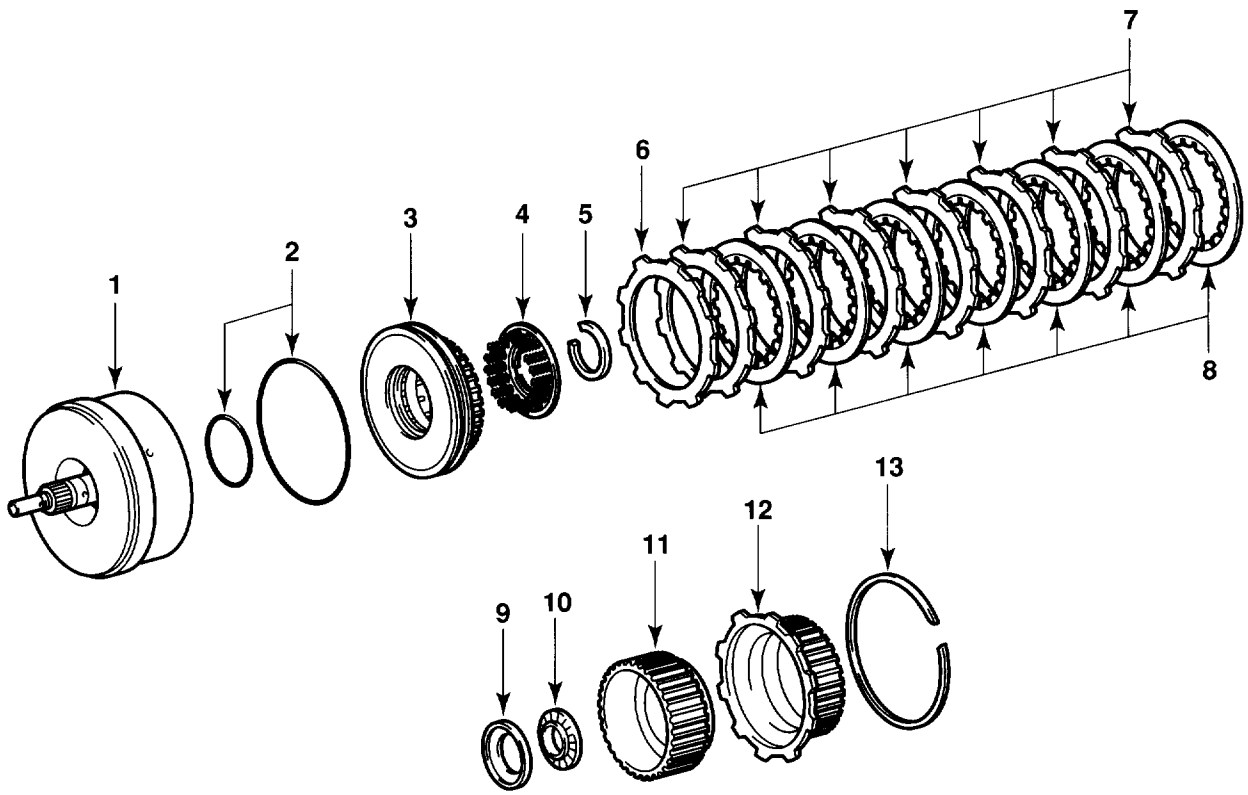

1. Front Clutch Drum
2. O-ring
3. Front Clutch Piston
4. Piston return Spring
5. Snap Ring
6. Cushion Plate
7. Plate
8. Disc
9. Race
10. Thrust Bearing
11. Front Clutch Hub
12. Rear Clutch Hub
13. Snap Ring

Figure 143. Front Clutch Assembly

Disassemble

1. Remove rear and front clutch hubs.
   a) Place the front clutch assembly onto the O/D case assembly.
   b) Using a screwdriver, remove the snap ring.
   c) Remove the rear clutch hub.

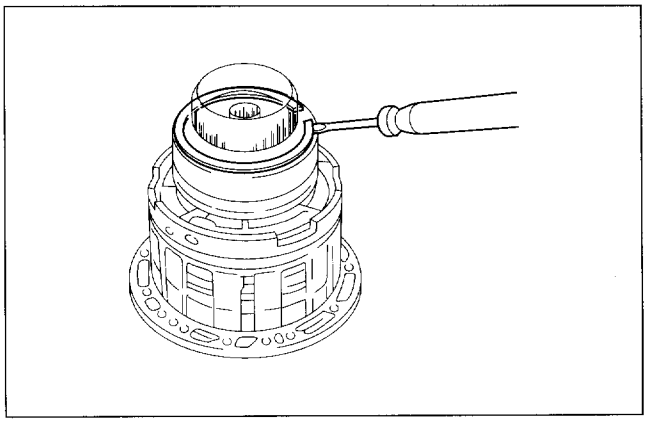

Figure 144. Snap Ring Removal

d) Remove the front clutch hub.

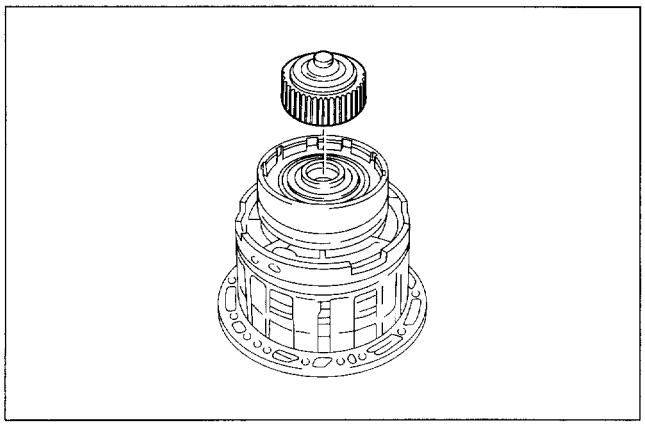

Figure 145. Front Clutch Hub Removal

e) Remove the race and thrust bearing.

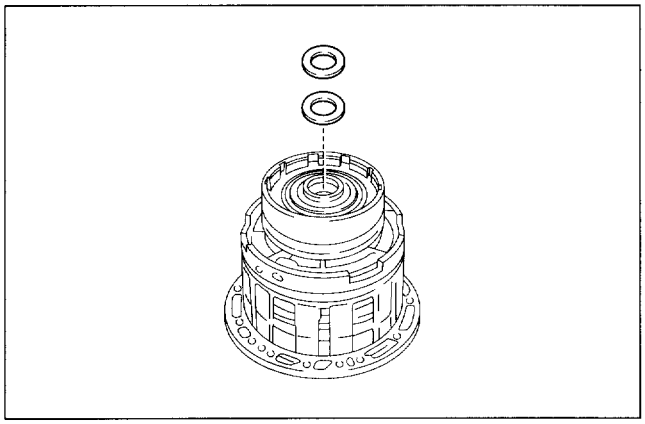

Figure 146. Race and Thrust Bearing Removal

2. Check piston stroke of front clutch.
   a) Install No.1 measure terminal to a dial indicator.
   Tool Required:
   5-8840-2649-0 No.1 Measure Terminal
   b) Place the assembled measure terminal and a dial indicator on the clutch piston.
   NOTICE:
   - **Stand the measure terminal on the piston vertically.**
   - **Ensure that the measure terminal does not touches other parts than the piston.**
   c) Install the rear clutch hub with the snap ring.
   NOTICE: Do not install the front clutch hub.

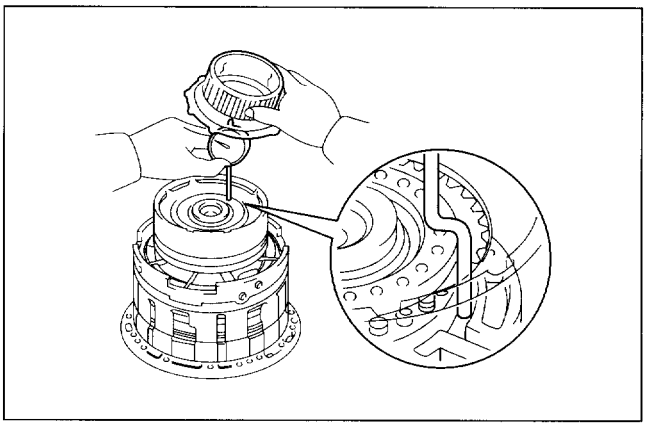

Figure 147. Piston Stroke Check (1)

d) Using No.1 measure terminal and a dial indicator, measure the piston stroke by applying and releasing compressed air 392–785 kPa (4–8 kgf/cm², 57–114 psi).
Tool Required:
5-8840-2649-0 No.1 Measure Terminal
Piston stroke: 3.93–4.23 mm (0.1547–0.1665 in.)
NOTICE: Measure the stroke at more than 3 points. If the piston stroke is gretaer than specified, inspect the discs.

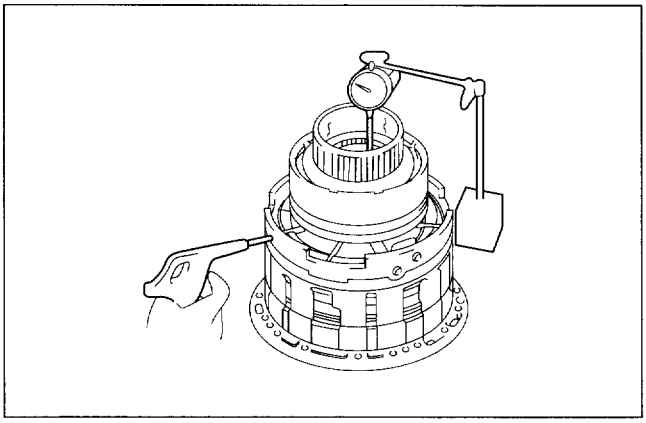

Figure 148. Piston Stroke Check (2)

3 Remove discs, plates and cushion plate.
   a) Remove the snap ring and rear clutch hub.

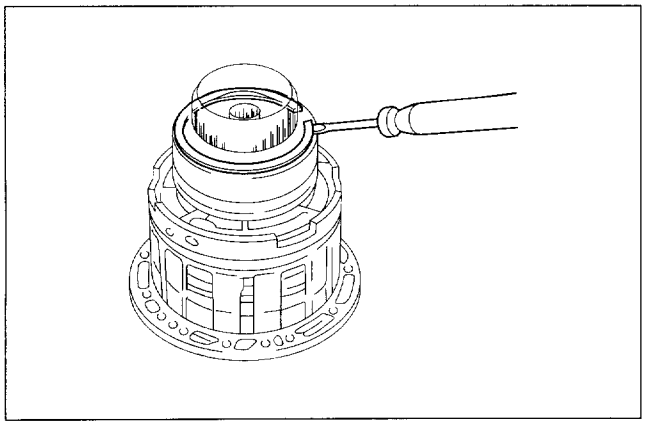

Figure 149. Rear Clutch Hub Removal

b) Remove the 7 discs, 7 plates and cushion plate.

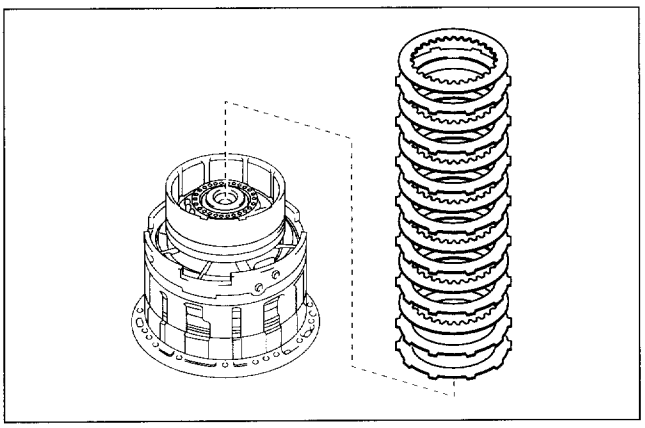

Figure 150. Disc and Plate Removal

4. Remove piston return springs.
   a) Place No.2 piston spring compressor on the spring seat, and compress the return springs with a shop press.
   NOTICE: Stop compressing the return spring at the position 1 to 2 mm away from the snap ring to prevent the spring sheet from being deformed.
   b) Using snap ring pliers, remove the snap ring.
   NOTICE: Do not damage the snap ring and do not deform them unless necessary.

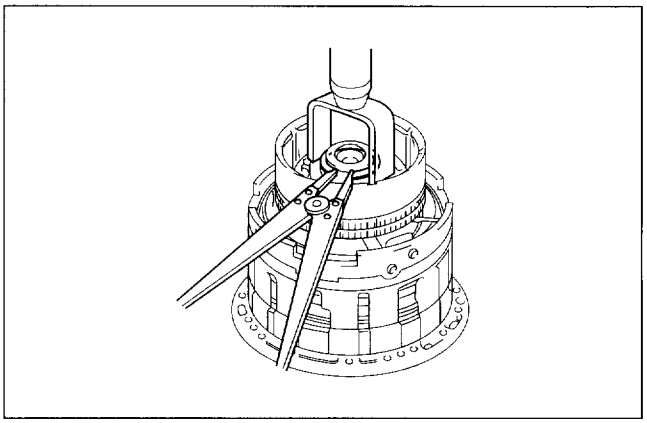

Figure 151. Piston Return Spring Removal

   c) Remove the piston return spring.
5. Remove front clutch piston.
   a) Holding the clutch piston by hand, apply compressed air 392–785 kPa (4–8 kgf/cm^2, 57–114 psi) into the oil hole of the O/D case to remove the clutch piston.
   b) Remove the 2 O-rings from the clutch piston.

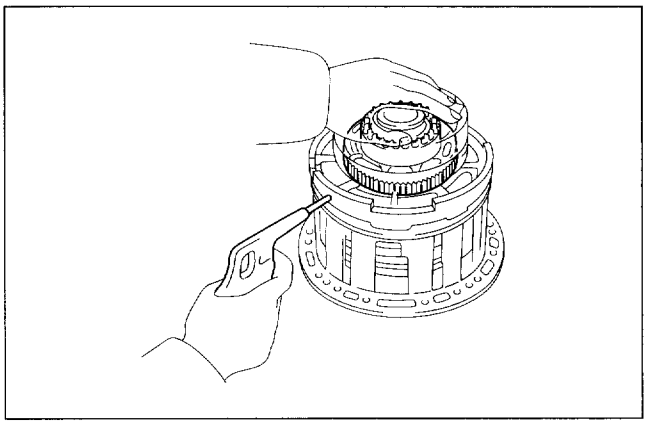

Figure 152. Front Clutch Piston Removal

Inspect

1. Inspect discs, plates and cushion plate.
   Check to see if the contacting surface of the disc, plate and cushion plate are worn or burnt. If necessary, replace them.
   NOTICE:
   - **If the lining of the disc is peeling off or discolored, or even if a parts of the printed numbers are defaced, replace all discs.**
   - **Before assembling new discs, soak them in ATF for at least 15 minutes.**

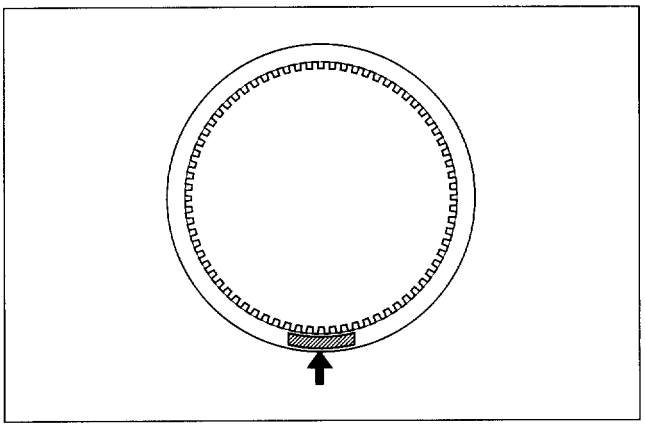

Figure 153. Disc Inspection

2. Inspect front clutch piston.
   a) Check that the check ball is free by shaking the piston.
   b) Check that the valve does not leak by applying compressed air 392–785 kPa (4–8 kgf/cm², 57–114 psi).

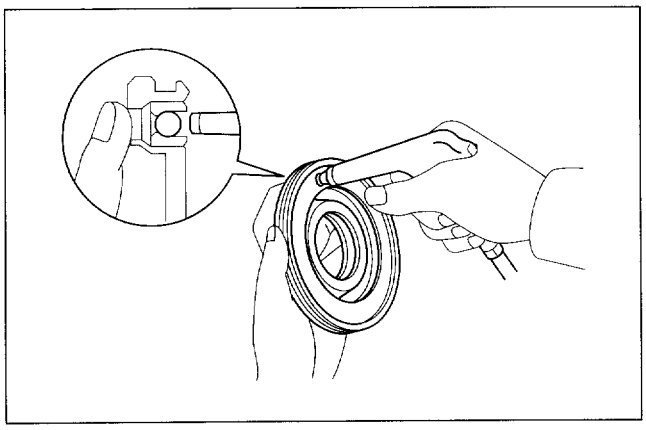

Figure 154. Front Clutch Piston Inspection

Assemble

1. Install front clutch piston.
   a. Place front clutch drum onto overdrive case assembly.

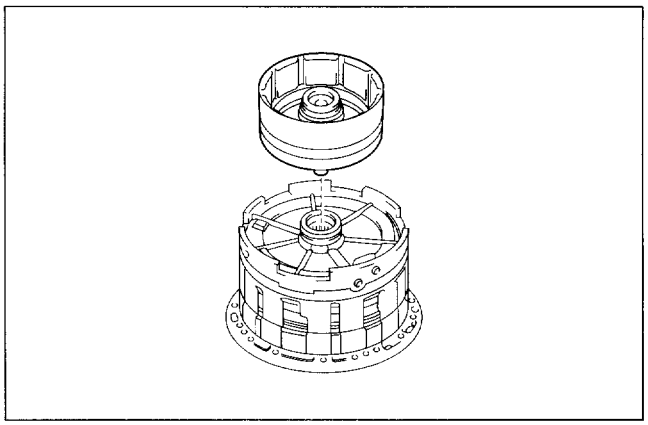

Figure 155. Front Clutch Piston Installation

   b) Coat new 2 O-rings with ATF, and install them on the clutch piston.

O-ring diameters mm (in.)

	Inside	Wire diameter
Inner side	62.9 (2.476)	2.6 (0.102)
Outer side	117.4 (4.622)	3.1 (0.122)

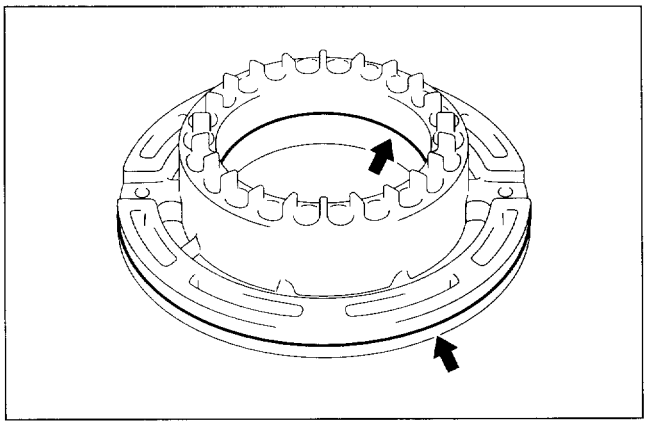

Figure 156. O-ring Location

   c) Push in the clutch piston into the clutch drum by both hands.
   CAUTION: Be careful not to damage the O-rings.

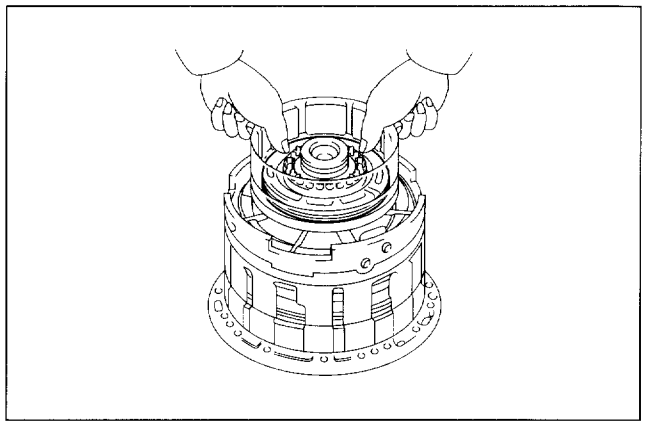

Figure 157. Clutch Piston Installation

2. Install piston return springs.
   a) Install the piston return spring on the clutch piston.

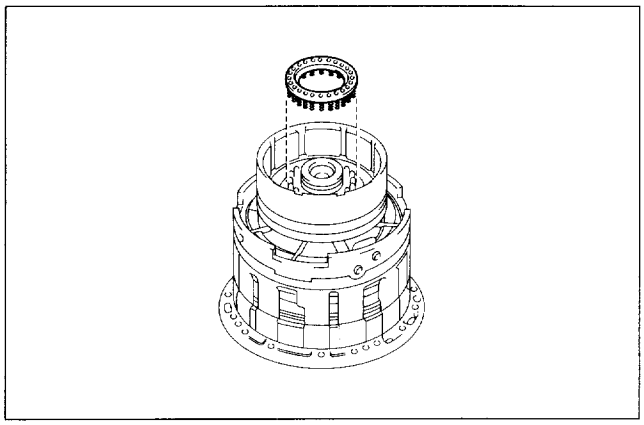

Figure 158. Piston Return Spring Installation (1)

   b) Place No.2 piston spring compressor on the spring seat, and compress the return springs with a shop press.

Tool Required:

5-8840-2641-0 No.2 Piston Spring Compressor

NOTICE: Stop compressing the return spring at the position 1 to 2 mm away from the snap ring to prevent the spring sheet from being deformed.

   c) Using snap ring pliers, install the snap ring.

NOTICE: Be sure the end gap of the ring is not aligned with the spring seat claw.

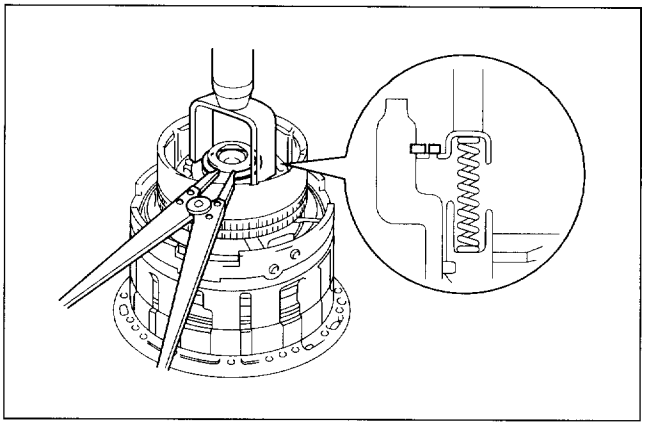

Figure 159. Piston Return Spring Installation (2)

3. Install cushion plate, plates and discs.
   a) Install the cushion plate, facing the rounded edge downward.

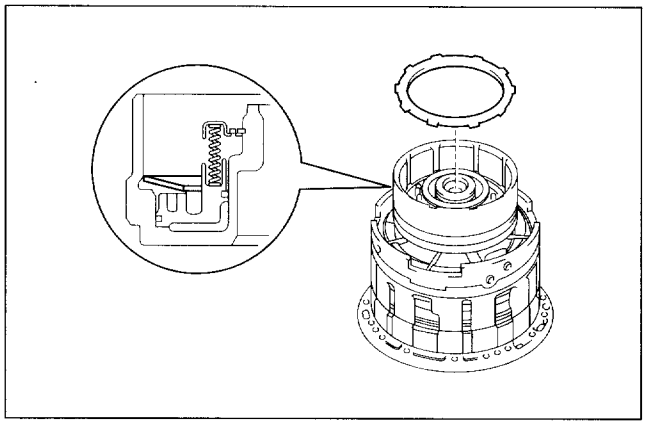

Figure 160. Cushion Plate Installation

   b) Install the 7 plates and 7 discs in order:
   P = Plate D = Disc
   P – D – P – D – P – D – P – D – P – D – P – D –Ⓟ– D

NOTICE: Ⓟ = This plate is used to adjust piston stroke.

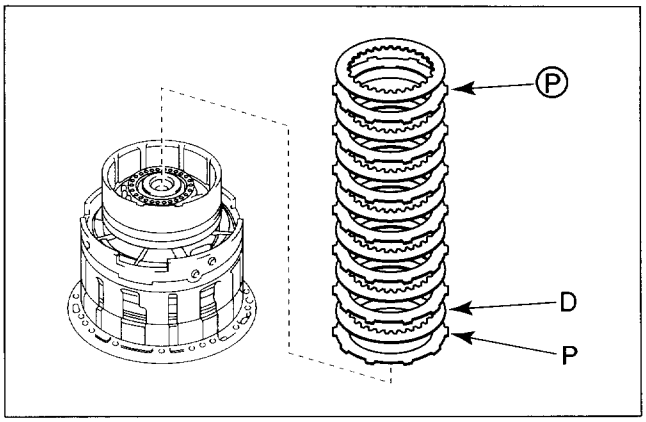

Figure 161. Plate and Disc Installation

4. Check piston stroke of front clutch.
   a) Install No.1 measure terminal to a dial indicator.
   Tool Required:
   5-8840-2649-0 No.1 Measure Terminal
   b) Place the assembled measure terminal and a dial indicator on the clutch piston.
   NOTICE:
   - **Stand the measure terminal on the piston vertically.**
   - **Ensure that the measure terminal does not touches other parts than the piston.**
   c) Install the rear clutch hub with the snap ring.
   NOTICE: Do not install the front clutch hub.

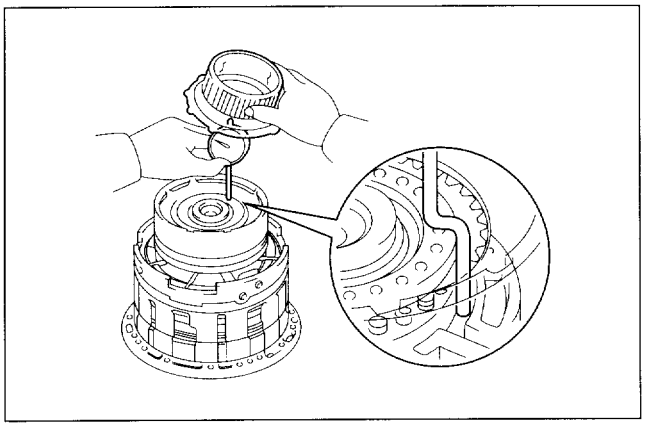

Figure 162. Piston Stroke Check (1)

   d) Using No.1 measure terminal and a dial indicator, measure the piston stroke by applying and releasing compressed air 392–785 kPa (4–8 kgf/cm², 57–114 psi).
   Piston stroke: 3.93–4.23 mm (0.1547–0.1665 in.)
   NOTICE: Measure the stroke at more than 3 points.
   If the piston stroke is less than specified, parts may have been assembled incorrectly, check and reassemble again.
   If the piston stroke is not as specified, select another plate.
   Plate thicknesses

Thickness mm (in.)	Thickness mm (in.)
1.8 (0.071)	2.2 (0.087)
2.0 (0.079)	2.4 (0.094)

   e) Remove the snap ring and rear clutch hub.

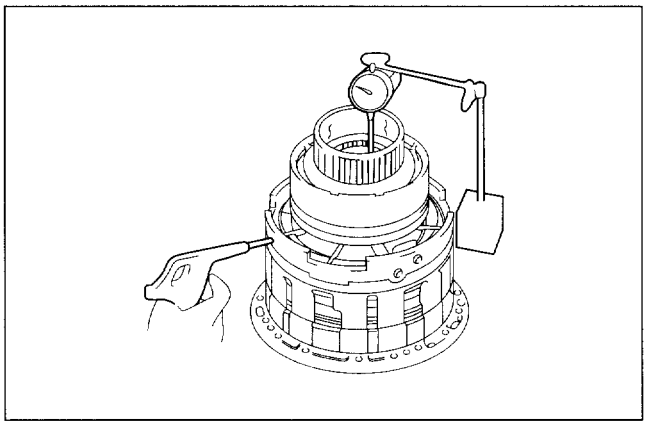

Figure 163. Piston Stroke Check (2)

5. Install front and rear clutch hubs.
   a) Coat the race and thrust bearing with petroleum jelly, and install them onto the front clutch drum.
   Race and bearing diameter

Diameter mm (in.)	Inside	Outside
Bearing	32.8 (1.291)	52.0 (2.047)
Race	37.0 (1.457)	52.0 (2.047)

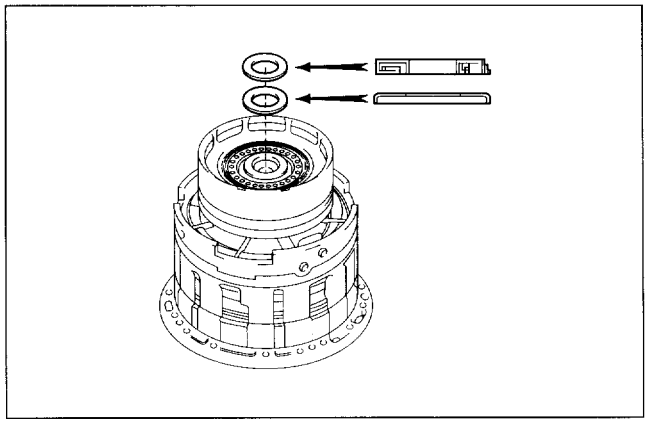

Figure 164. Bearing Installation

   b) Install the front clutch hub into the clutch drum.
   NOTICE: Mesh the spline of the front clutch hub with the flukes of the discs by rotating the front clutch hub clockwise or counterclockwise.

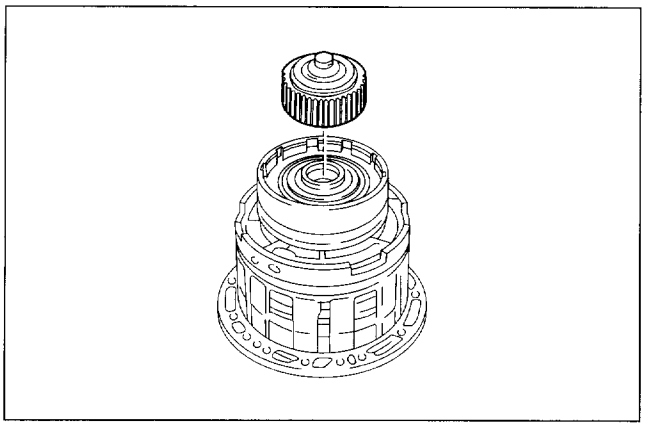

Figure 165. Front Clutch Hub Installation

c) Install the rear clutch hub onto the clutch drum.
d) Using a screwdriver, install the snap ring.

NOTICE: Be sure the end gap of the snap ring is not aligned with the cutout portion of the front clutch drum.

e) Remove the front clutch assembly from the O/D case.

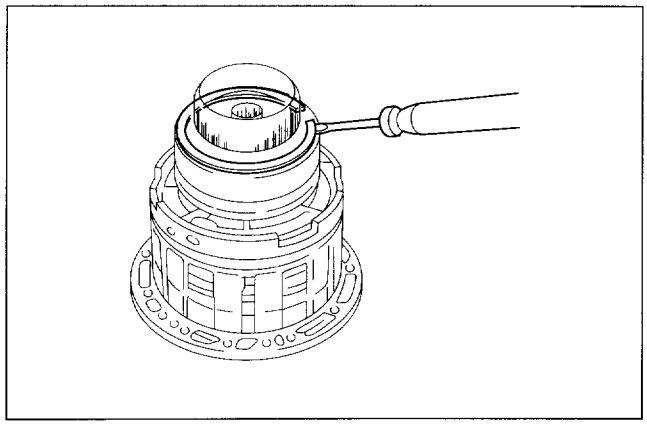

Figure 166. Rear Clutch Hub Installation

REAR CLUTCH

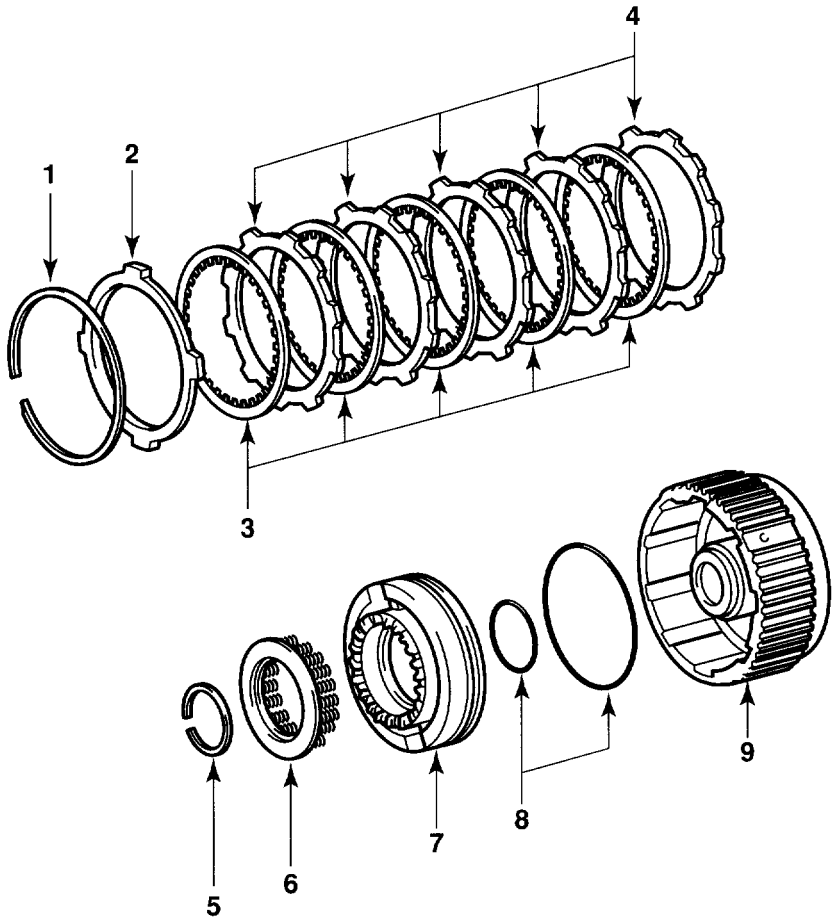

1. Snap Ring
2. Flange
3. Disc
4. Plate
5. Snap Ring
6. Piston Return Spring
7. Rear Clutch Piston
8. O-ring
9. Rear Clutch Drum

Figure 167. Rear Clutch Assembly

Disassemble

1. Check piston stroke of rear clutch.
   a) Place the center support assembly on wooden blocks.
   NOTICE: Provide clearance so that the sun gear does not touch the rear clutch drum.
   b) Place the rear clutch assembly into the center support assembly.

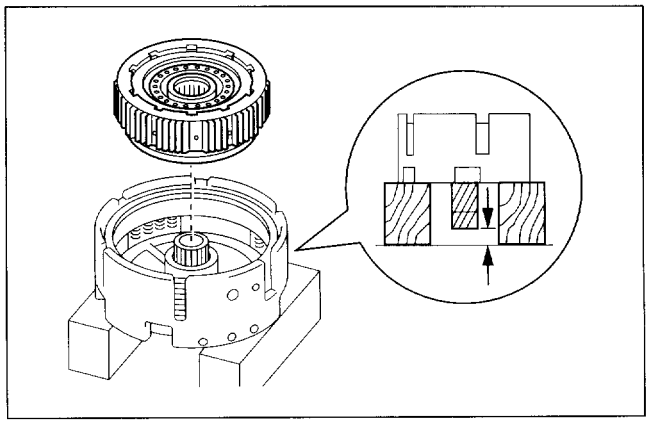

Figure 168. Piston Stroke Check (1)

Using No.1 measure terminal and a dial indicator, measure the piston stroke by applying and releasing the compressed air 392–785 kPa (4–8 kgf/cm², 57–114 psi).
Tool Required:
5-8840-2649-0 No.1 Measure Terminal
Piston stroke: 2.00–2.20 mm (0.0787–0.0866 in.)
NOTICE:
- **Stand the measure terminal on the piston vertically.**
- **Ensure that the measure terminal does not touches other parts than the piston.**
- **Measure the stroke at more than 3 points.**

If the piston stroke is greater than specified, inspect the discs.

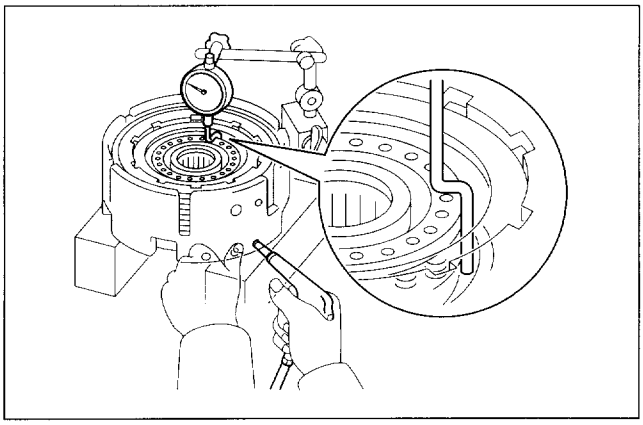

Figure 169. Piston Stroke Check (2)

2. Remove flange, discs and plates.
   a) Using a screwdriver, remove the snap ring.

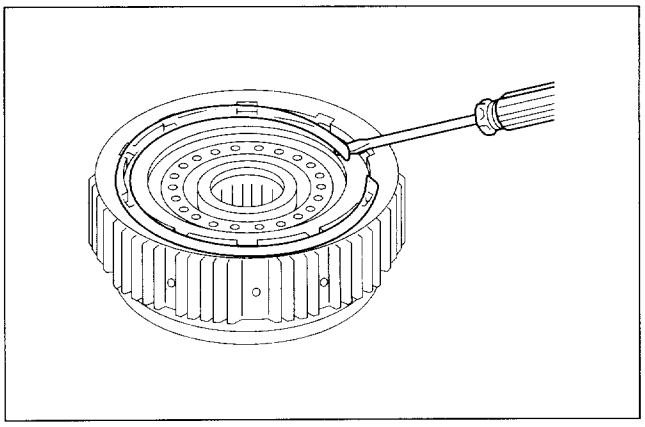

Figure 170. Snap Ring Removal

   b) Remove the flange, 5 discs and 5 plates.

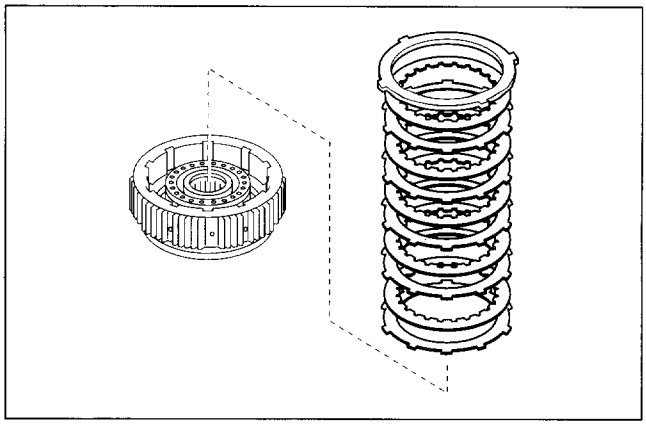

Figure 171. Flange, Disc and Plate Removal

3. Remove piston return spring.
   a) Place No.2 piston spring compressor on the spring seat, and compress the return spring with a shop press.
   Tool Required:
   5-8840-2641-0 No.2 Piston Spring Compressor
   NOTICE: Stop compressing the return spring at the position 1 to 2 mm away from the snap ring to prevent the spring sheet from being deformed.
   b) Using snap ring pliers, remove the snap ring.
   NOTICE: Do not damage the snap ring and do not defrom them unless necessary.

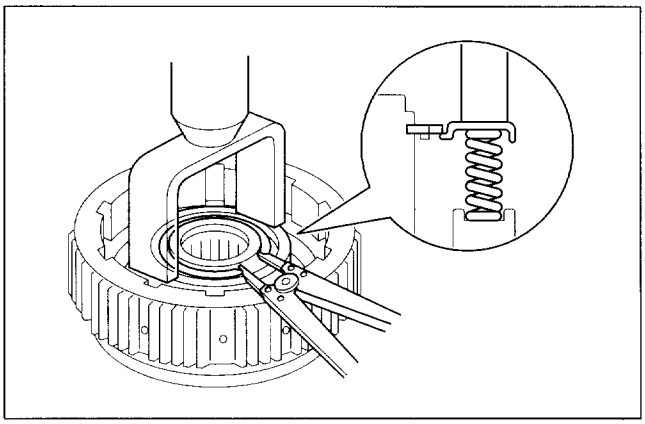

Figure 172. Piston Return Spring Removal

   c) Remove the piston return spring.

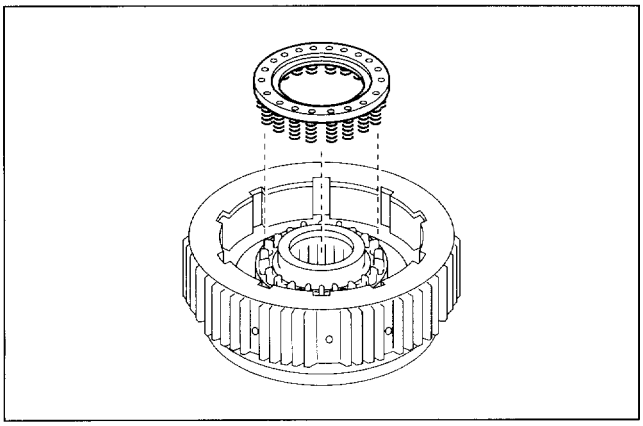

Figure 173. Piston Return Spring Removal (2)

4. Remove rear clutch piston.
   a) Place the center support assembly on wooden blocks.
   b) Place the rear clutch drum onto the center support assembly.
   c) Hold the piston with hand, apply compressed air 392–785 kPa (4–8 kgf/cm^2, 57–114 psi) into the oil hole of the center support to remove the clutch piston.
   d) Remove the 2 O-rings from the clutch piston.

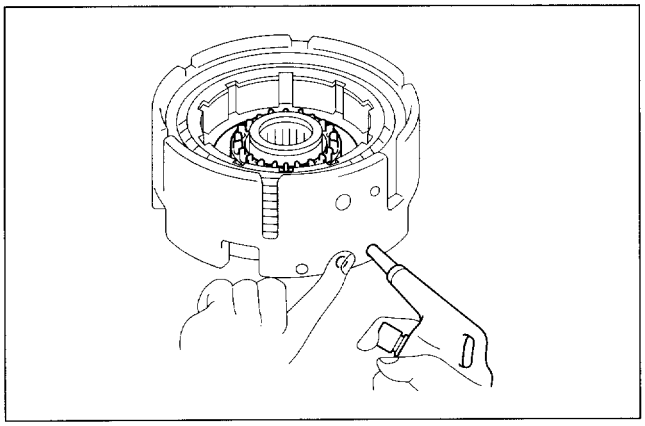

Figure 174. Rear Clutch Piston Removal

Inspect

1. Inspect discs, plates and flange.
   Check to see if the contacting surface of the disc, plate and flange are worn or burnt. If necessary, replace them.
   NOTICE:
   - **If the lining of the disc is peeling off or discolored, or even if a parts of the printed numbers are defaced, replace all discs.**
   - **Before assembling new discs, soak them in ATF for at least 15 minutes.**

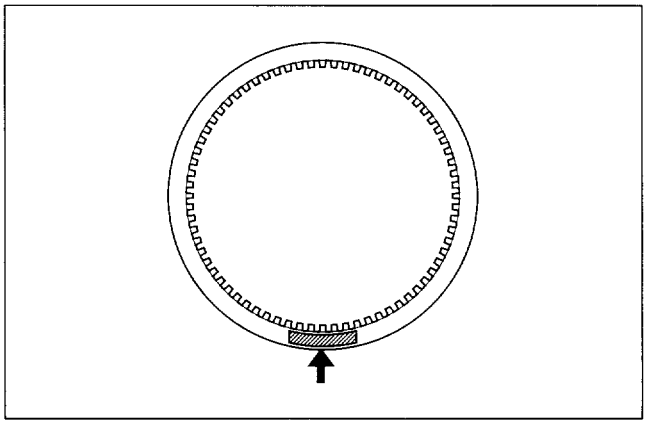

Figure 175. Disc Inspection

2. Inspect rear clutch piston.
   a) Check that check ball is free by shaking the piston.
   b) Check that the valve does not leak by applying low-pressure compressed air.

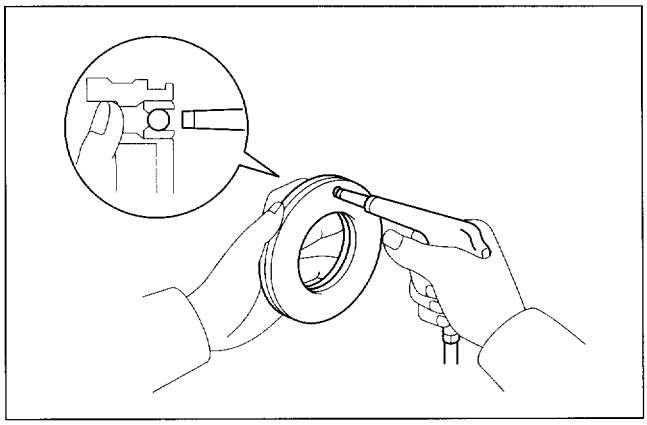

Figure 176. Rear Clutch Piston Check

Assemble

1. Install rear clutch piston.
   a) Coat new O-rings with ATF, and install them in the clutch drum.

O-ring diameters mm (in.)

	Inside	Wire diameter
Inner side	62.9 (2.4767)	2.6 (0.1024)
Outer side	109.7 (4.3189)	3.1 (0.1220)

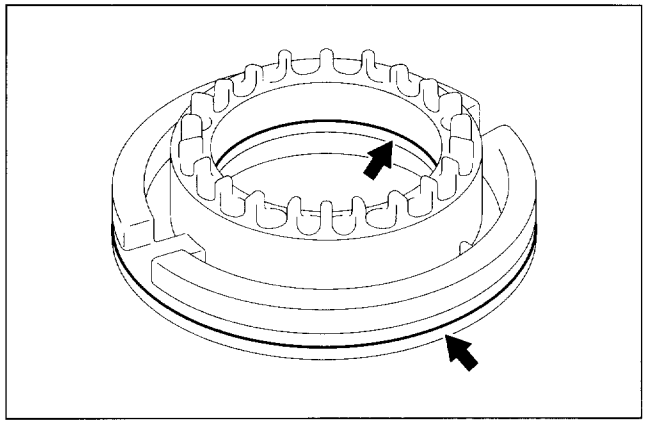

Figure 177. O-ring Location

   b) Push in the clutch piston into the clutch drum with both hands.

CAUTION: Be careful not to damage the O-rings.
NOTICE: Push in the piston uniformly.

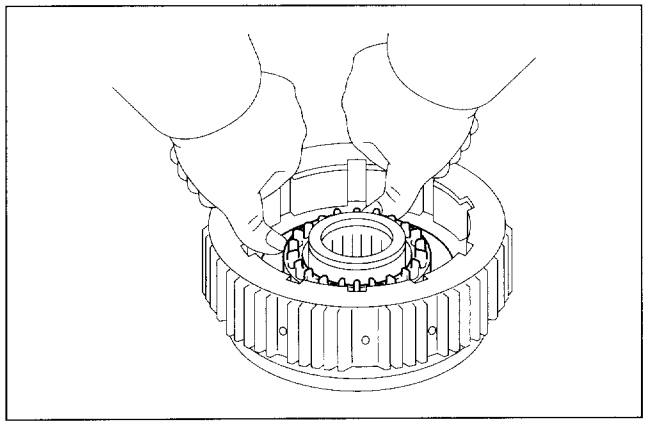

Figure 178. Clutch Piston Installation

2. Install piston return springs.
   a) Place the piston return spring on the clutch piston.

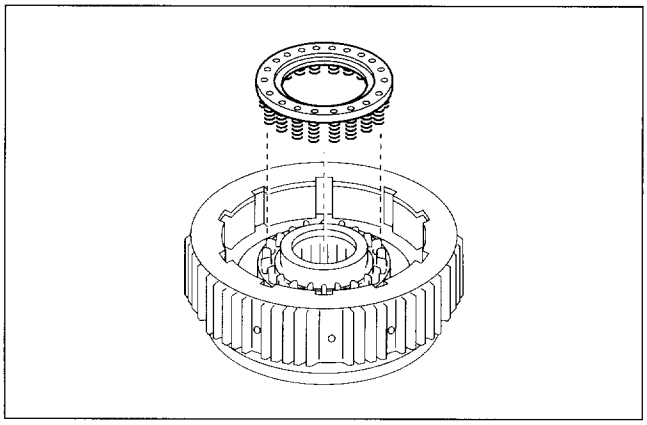

Figure 179. Piston Return Spring Installation (1)

   b) Place No.2 piston spring compressor on the spring seat, and compress the return spring with a shop press.

Tool Required:
5-8840-2641-0 No.2 Piston Spring Compressor

NOTICE: Stop compressing the return spring at the position 1 to 2 mm away from the snap ring to prevent the spring sheet from being deformed.

   c) Using snap ring pliers, install the snap ring.

NOTICE: Be sure the end gap of the snap ring is not aligned with the spring retainer claw.

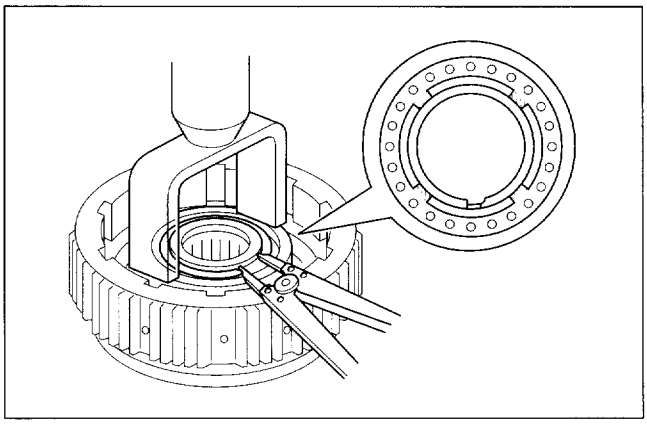

Figure 180. Piston Return Spring Installation (2)

3. Install plates, discs and flange.
   a) Install the 5 plates and 5 discs in order:
      P = Plate D = Disc
      P – D – P – D – P – D – P – D – P – D

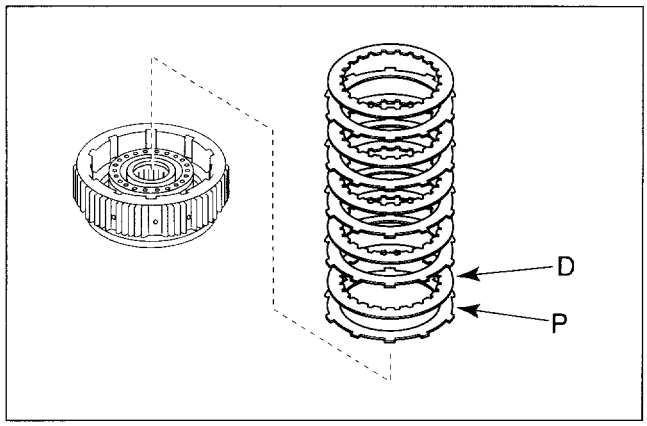

Figure 181. Plate and Disc Installation

b) Install the flange, facing the rounded edge upward.
NOTICE: If the flange is step-edged, install the flange with the step-edge, facing downward.

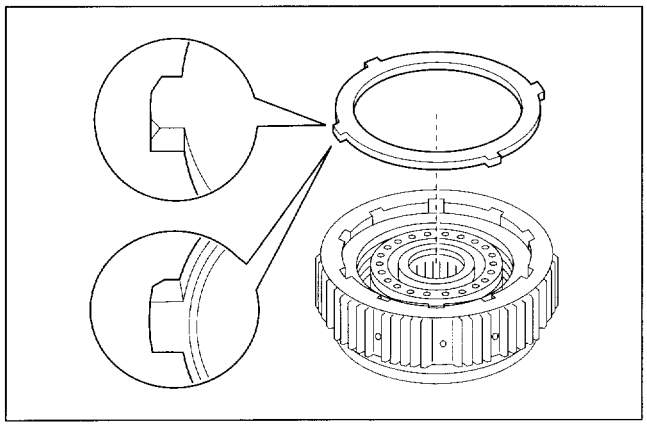

Figure 182. Flange Installation

c) Using a screwdriver, install the snap ring.
NOTICE: Be sure the end gap of the snap ring is not aligned with the cutout portion of the rear clutch drum.

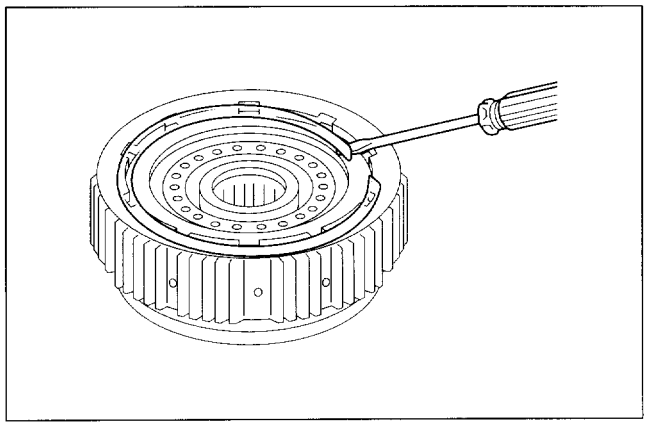

Figure 183. Snap Ring Installation

4. Check piston stroke of rear clutch.
   a) Place the center support assembly on wooden blocks.
   NOTICE: Provide clearance so that the sun gear does not touch the rear clutch drum.
   b) Place the rear clutch assembly onto the center support assembly.

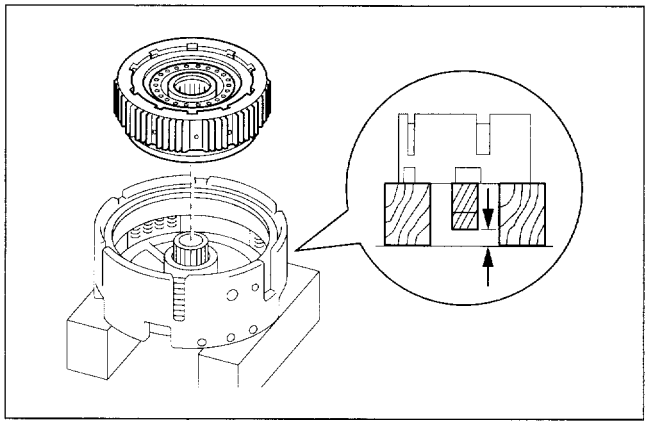

Figure 184. Piston Stroke Check (1)

c) Using No.1 measure terminal and a dial indicator, measure the piston stroke while applying and releasing compressed air 392–785 kPa (4–8 kgf/cm², 57–114 psi).
Tool Required:
5-8840-2649-0 No.1 Measure Terminal
Piston stroke: 2.00–2.20 mm (0.0787–0.0866 in.)
NOTICE:
- **Stand the measure terminal on the piston vertically.**
- **Ensure that the measure terminal does not touches other parts than the piston.**
- **Measure the stroke at more than 3 points.**

If the piston stroke is less than specified, parts may have been assembled incorrectly, check and reassemble again.
If the piston stroke is not as specified, select another flange.
Flange thicknesses

No.	Thickness mm (in.)	No.	Thickness mm (in.)
A	5.0 (0.197)	E	4.6 (0.181)
B	5.2 (0.205)	F	4.8 (0.189)

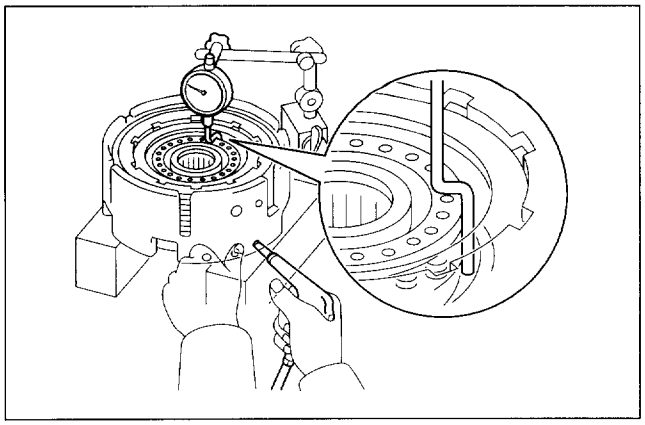

Figure 185. Piston Stroke Check (2)

SECOND BRAKE

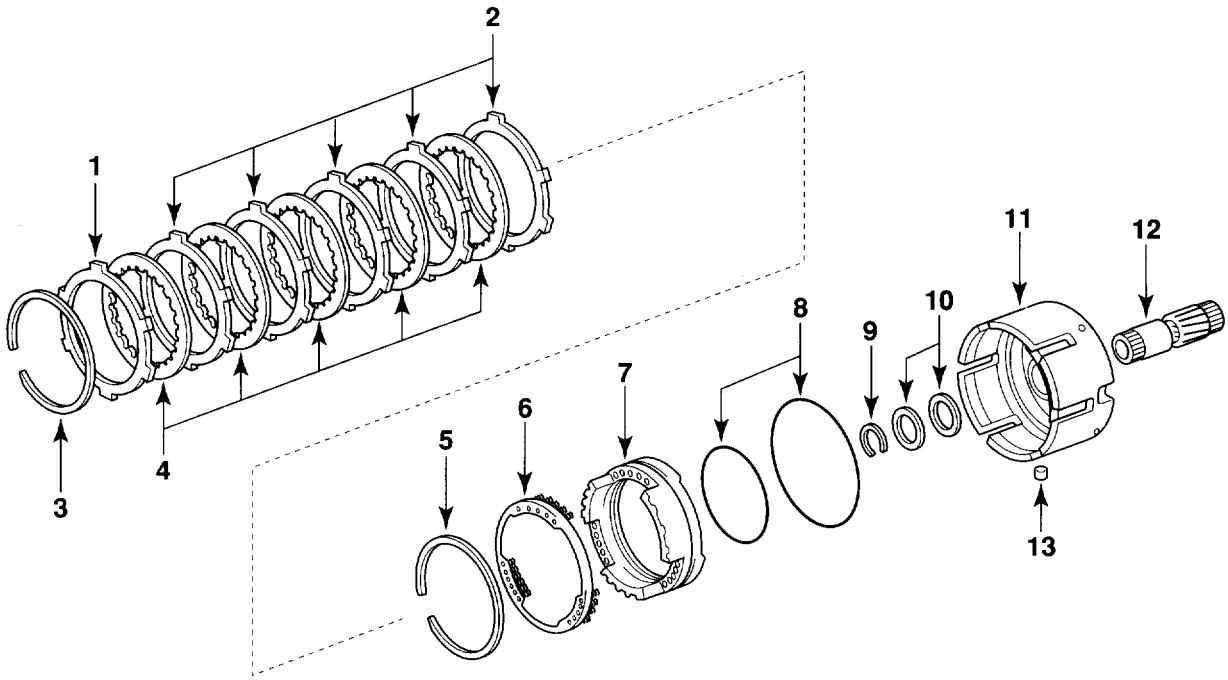

1. Flange
2. Plate
3. Snap Ring
4. Disc
5. Snap Ring
6. Piston return Spring
7. Second Brake Piston
8. O-ring
9. Snap Ring
10. Oil Seal Ring
11. Center Support
12. Front Planetary Sun Gear
13. Retainer

Figure 186. Second Brake Assembly

Disassemble

1. Remove front planetary sun gear.
   a) Using snap ring pliers, remove the snap ring.

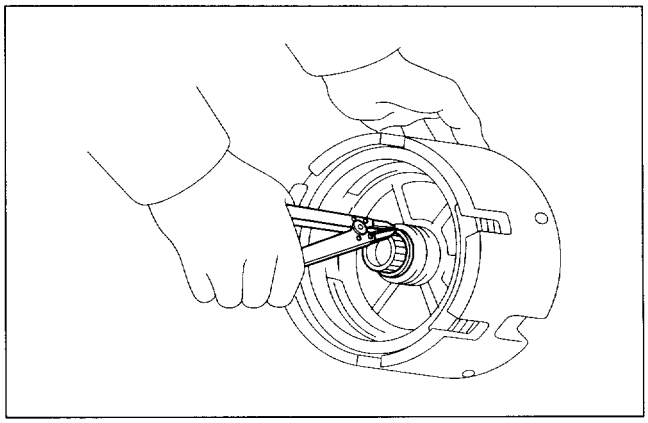

Figure 187. Sun Gear Removal

b) Remove the sun gear.

2. Check piston stroke of second brake.
   Using No.2 measure terminal and a dial indicator, measure the piston stroke by applying and releasing compressed air 392–785 kPa (4–8 kgf/cm², 57–114 psi).
   Tool Required:
   5-8840-2650-0 No.2 Measure Terminal
   Piston stroke: 1.86–2.06 mm (0.0732–0.0811 in.)
   NOTICE:
   - **Stand the measure terminal on the piston vertically.**
   - **Ensure that the measure terminal does not touches other parts than the piston.**
   - **Measure the stroke at more than 3 points.**

   If the piston stroke is greater than specified, inspect the discs.

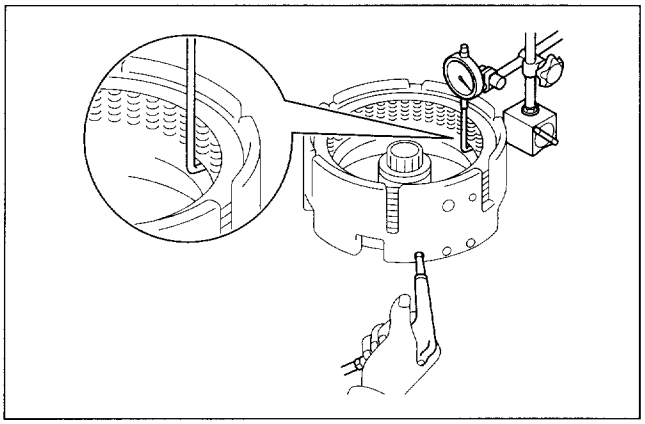

Figure 188. Piston Stroke Check

3. Remove flange, discs and plates.
   a) Using a screwdriver, remove the snap ring.

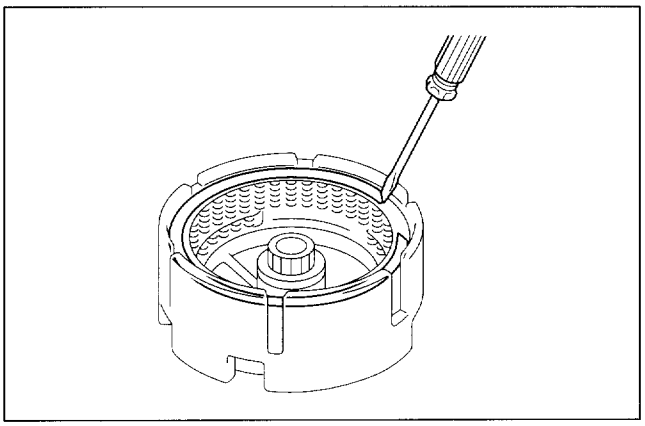

Figure 189. Snap Ring Removal

b) Remove the flange, 5 discs and 5 plates.

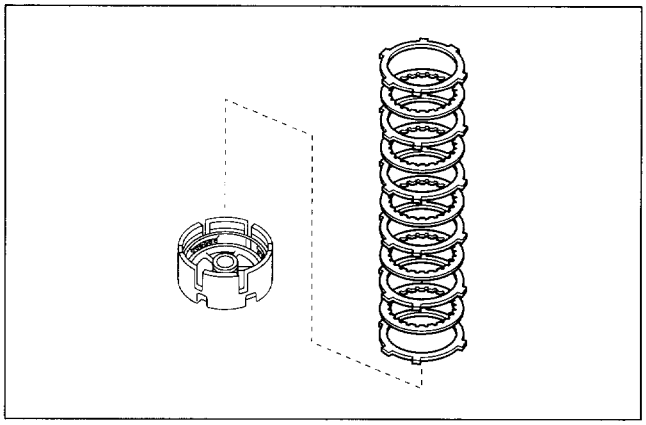

Figure 190. Flange, Disc and Plate Removal

4. Remove piston return spring.
   a) Place No.3 piston spring compressor on the spring seat, and compress the return spring with a shop press.
   Tool Required:
   5-8840-2642-0 No.3 Piston Spring Compressor
   NOTICE: Stop compressing the return spring at the position 1 to 2 mm away from the snap ring to prevent the spring sheet from being deformed.
   b) Using a screwdriver, remove the snap ring.

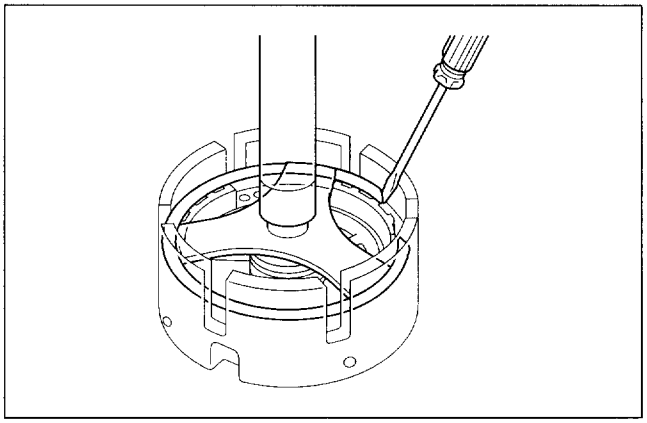

Figure 191. Return Spring Removal (1)

c) Remove the piston return spring.

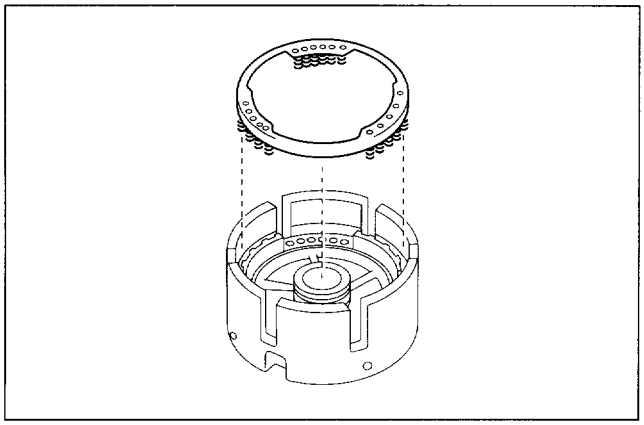

Figure 192. Return Spring Removal (2)

5. Remove second brake piston.
   a) Place the No.3 piston spring compressor on the brake piston.
   Tool Required:
   5-8840-2642-0 No.3 Piston Spring Compressor
   b) Hold the spring compressor so it does not slant, and apply compressed air 392–785 kPa (4–8 kg/cm², 57–114 psi) into the oil hole of the center support to remove the brake piston.
   c) Remove the 2 O-rings from the brake piston.

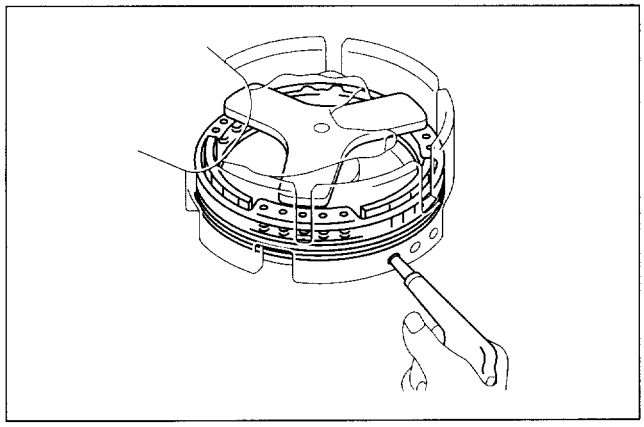

Figure 193. Piston Removal

6. Remove oil seal rings.
   Remove the 2 oil seal rings from the center support.
   CAUTION:
   - **Do not damage the oil seal rings and do not deform them unless necessary.**
   - **Do not damage the claws on the oil seal rings.**

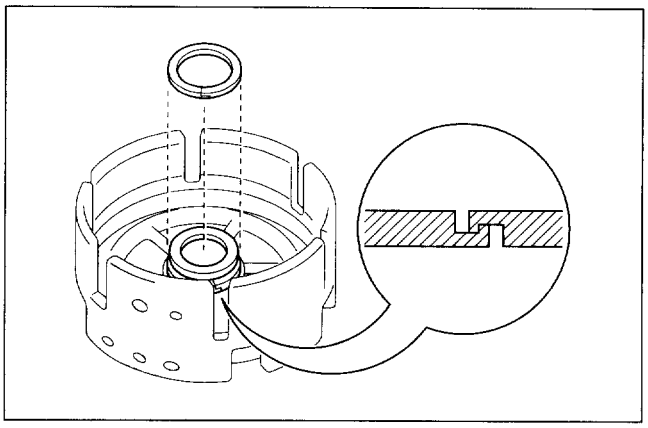

Figure 194. Oil Seal Removal

7. Remove ring retainers.
   Using needle nose pliers, remove the 3 ring retainers from the oil holes of the center support.

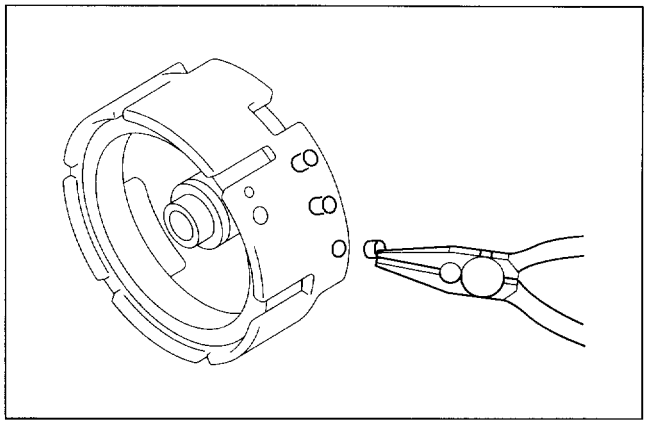

Figure 195. Ring Retainer Removal

Inspect

1. Inspect discs, plates and flange.
   Check to see if the contacting surface of the disc, plate and flange are worn or burnt. If necessary, replace them.
   NOTICE:
   - **If the lining of the disc is peeling off or discolored, or even if parts of the printed numbers are defaced, replace all discs.**
   - **Before assembling new discs, soak them in ATF for at least 15 minutes.**

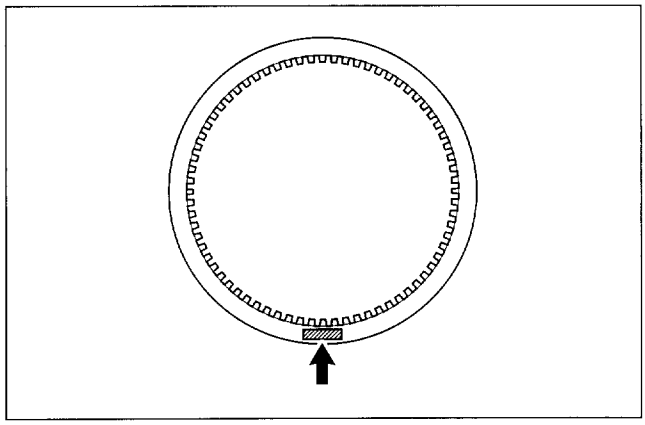

Figure 196. Disc Inspection

2. Inspect bushing of center support.
   Using a dial indicator, measure the inside diameter.
   Standrad inside diameter: 35.000–35.025 mm (1.3780–1.3789 in.)
   Maximum inside diameter: 35.08 mm (1.3811 in.)
   NOTICE: Measure at several points and take the average value.
   If the inside diameter is greater than the maximum, replace the center support.
   Inspect the bushing contacting surface of the front planetary sun gear, when discoloration or damage on the surface is found, replace the front planetary sun gear with a new one.

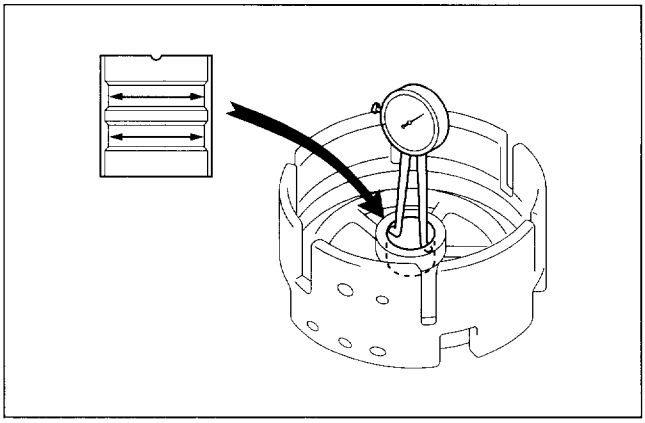

Figure 197. Bushing Inspection

3. Inspect bushings of front planetary sun gear.
   Using a dial indicator, measure the inside diameter.
   Standrad inside diameter: 25.500–25.521 mm (1.0039–1.0048 in.)
   Maximum inside diameter: 25.570 mm (1.0067 in.)
   NOTICE: Measure at several points and take the average value.
   If the inside diameter is greater than the maximum, replace the front planetary sun gear.
   Inspect the bushing contacting surface of the intermediate shaft, when discoloration or damage on the surface is found, replace the intermediate shaft with a new one.

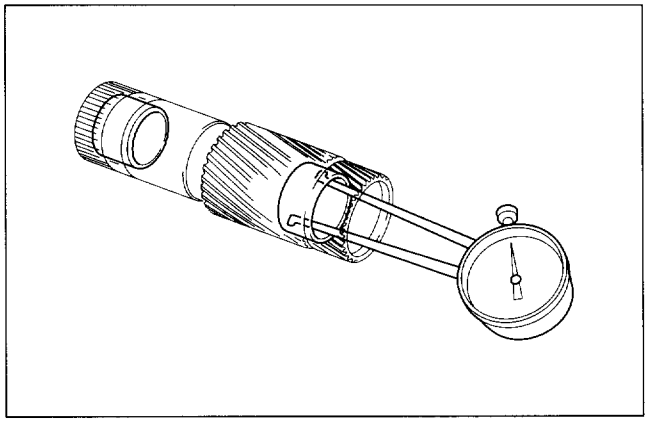

Figure 198. Sun Gear Bushing Inspection

Assemble

1. Install ring retainers.
   Using needle nose pliers, install the 3 ring retainers into the oil holes of the center support.

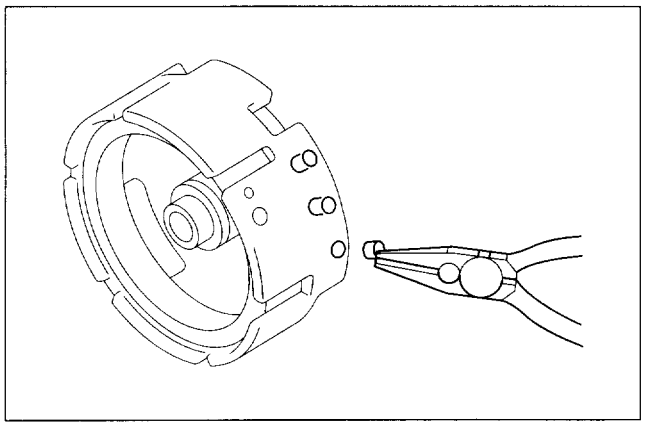

Figure 199. Ring Retainer Installation

2. Install oil seal rings.
   a) Coat the new 2 oil seal rings with ATF.
   b) Contract the oil seal rings, and install them onto the center support.

   CAUTION:
   - **Do not spread the ring ends more than necessary.**
   - **Do not damage the claws on the oil seal rings.**

   NOTICE:
   - **If the oil seal rings are damaged or deformed, replace them with new ones.**
   - **After installing the oil seal rings, check that they rotate smoothly.**

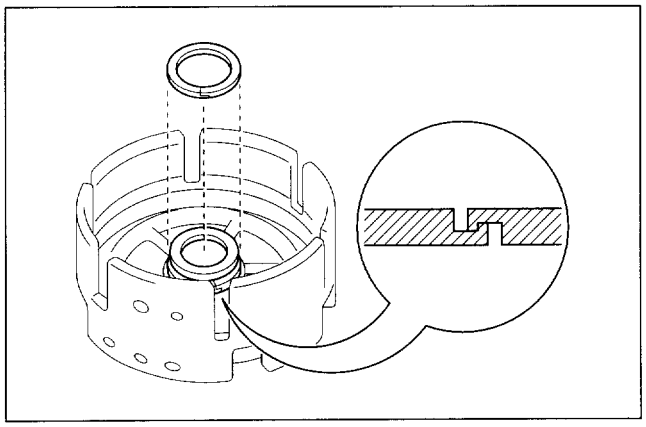

Figure 200. Seal Ring Installation

3. Install second brake piston.
   a) Coat the new 2 O-rings with ATF, and install them on the brake piston.

O-ring diameters mm (in.)

	Inside	Wire diameter
Inner side	145.3 (5.72047)	3.1 (0.12208)
Outer side	163.7 (6.44489)	3.1 (0.12208)

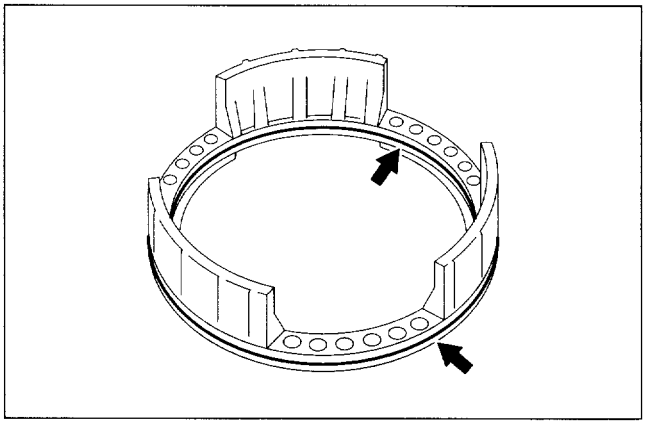

Figure 201. O-ring Installation

   b) Align the protrusions of the brake piston with the grooves of the center support.
   c) Push in the brake piston into the center support with both hands.

   CAUTION:
   - **Be careful not to damage the O-rings.**
   - **Push in the piston uniformly.**

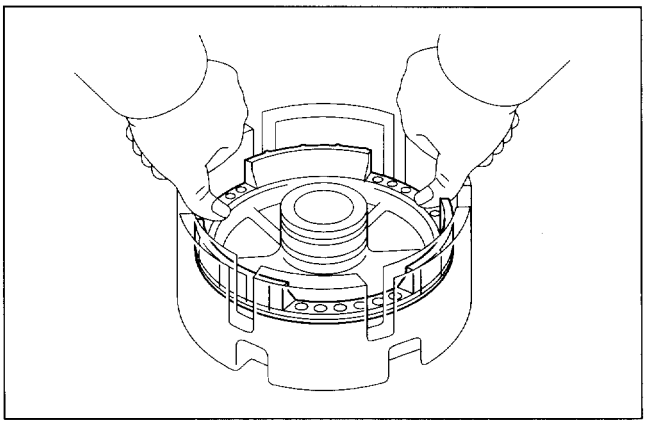

Figure 202. Piston Installation

4. Install piston return spring.
   a) Place the return spring on the brake piston.

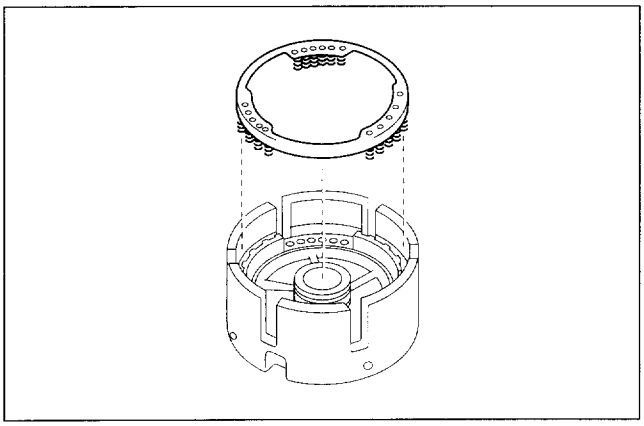

Figure 203. Return Spring Installation (1)

b) Place the No.3 piston spring compressor on the return spring, and compress the return spring with a shop press.

Tool Required:

5-8840-2642-0 No.3 Piston Spring Compressor

NOTICE: Stop compressing the return spring at the position 1 to 2 mm away from the snap ring to prevent the spring sheet from being deformed.

c) Using a screwdriver, install the new snap ring.

NOTICE: Be sure the end gap of the snap ring is not aligned with the cutout portion of the center support.

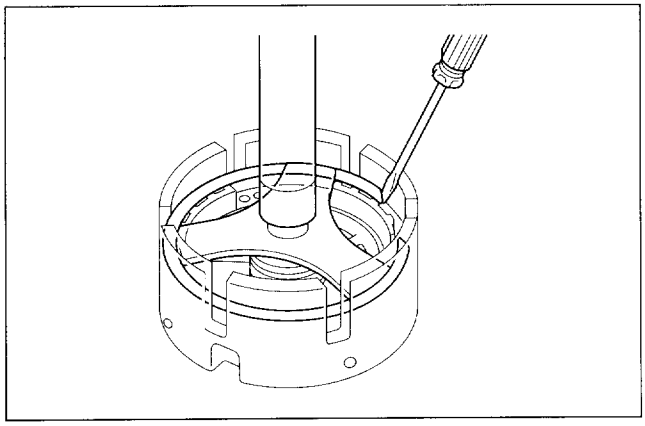

Figure 204. Return Spring Installation (2)

5. Install plates, discs and flange.
   a) Install the 5 plates and 5 discs in order:
      P = Plate D = Disc
      P – D – P – D – P – D – P – D – P – D

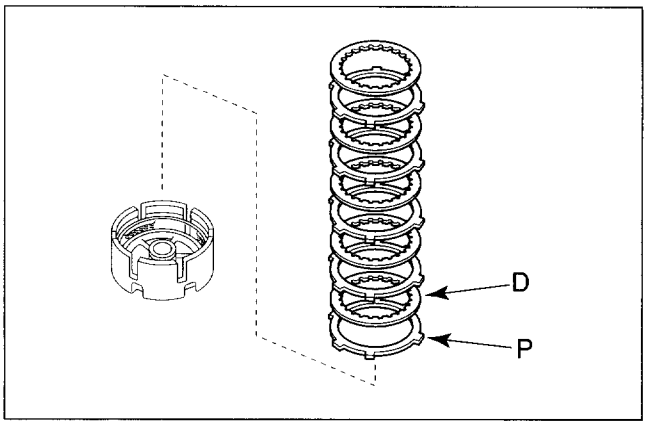

Figure 205. Plate and Disc Installation

b) Install the flange, facing the rounded edge upward.

NOTICE: If the flange is step-edged, install the flange with the step-edge, facing downward.

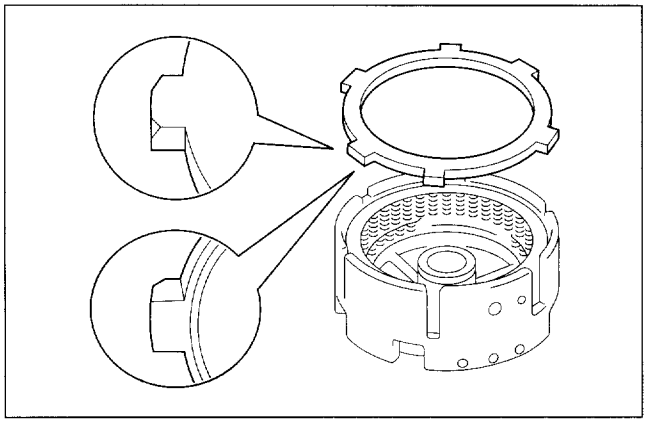

Figure 206. Flange Installation

c) Using a screwdriver, install the snap ring.

NOTICE: Be sure the end gap of the snap ring is not aligned the cutout portion of the center support.

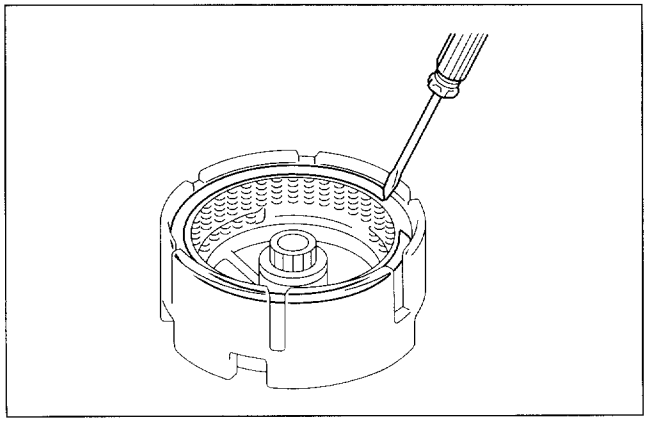

Figure 207. Snap Ring Installation

6. Check piston stroke of second brake.
   Using the No.2 measure terminal and a dial indicator, measure the piston stroke by applying and releasing compressed air 392–785 kPa (4–8 kg/cm², 57–114 psi).
   Piston stroke: 1.86–2.06 mm (0.0732–0.0811 in.)
   NOTICE:
   - **Stand the measure terminal on the piston vertically.**
   - **Ensure that the measure terminal does not touches other parts than the piston.**
   - **Measure the stroke at more than 3 points.**

   If the piston stroke is less than specified, parts may have been assembled incorrectly, check and reassemble again.
   If the piston stroke is not as specified, select another flange.
   Flange thicknesses

No.	Thickness mm (in.)	No.	Thickness mm (in.)
A	5.0 (0.197)	C	5.4 (0.213)
B	5.2 (0.205)	D	5.6 (0.220)

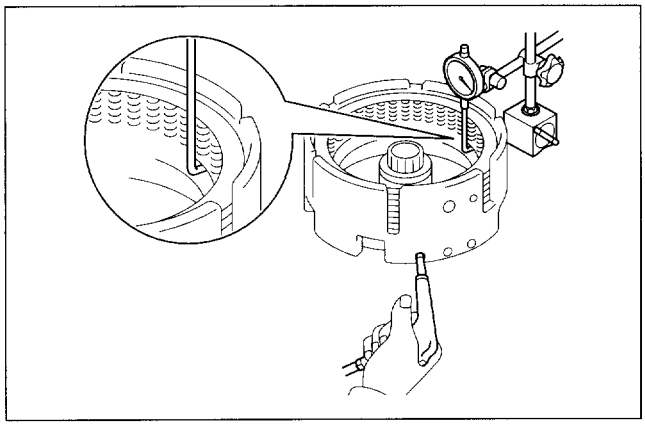

Figure 208. Piston Stroke Check

6. Install front planetary sun gear.
   a) Install the sun gear.
   b) Using snap ring pliers, install the snap ring.

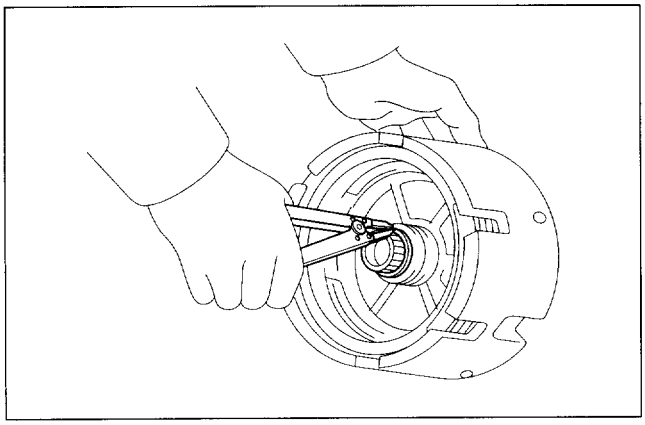

Figure 209. Sun Gear Installation

PLANETARY GEARS, ONE-WAY CLUTCH AND OUTPUT SHAFT

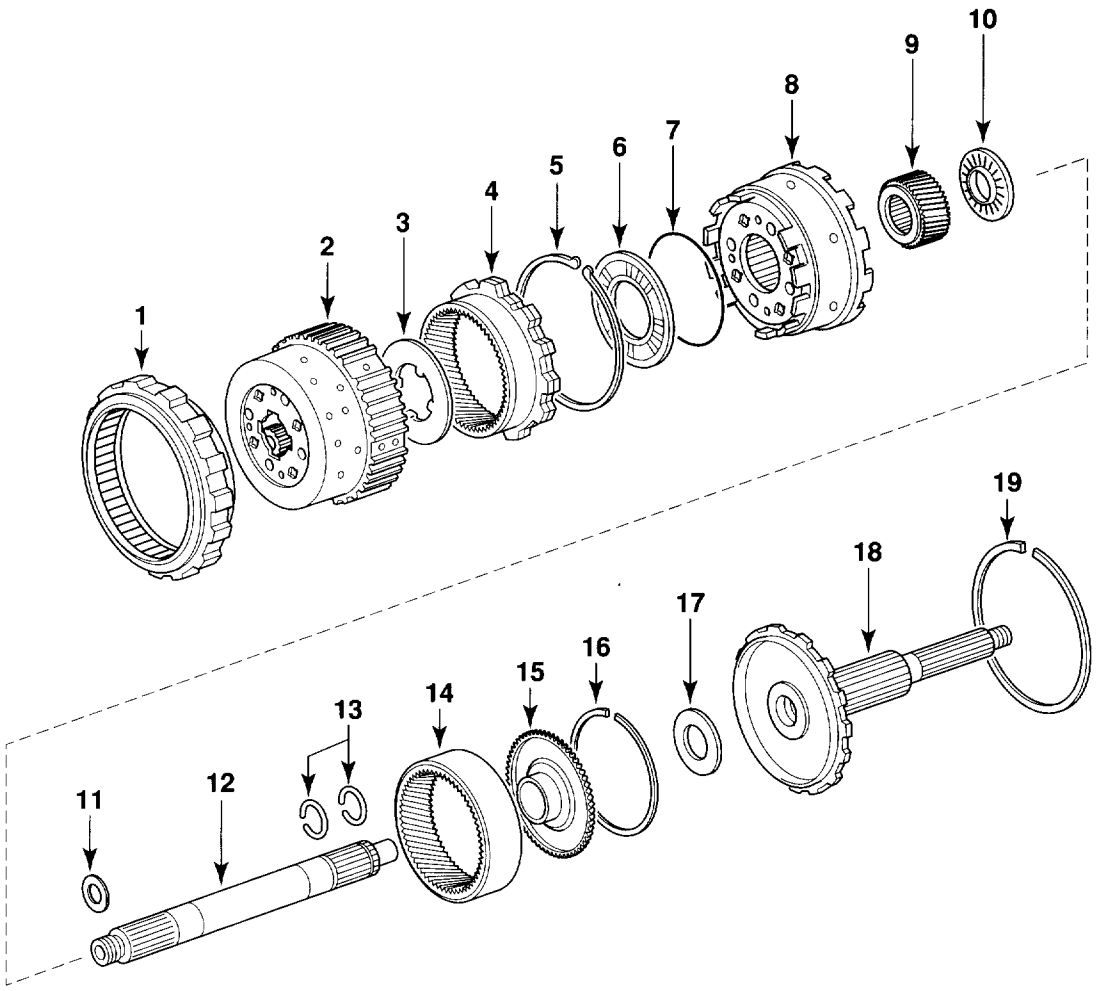

1. One-way Clutch
2. Front Planetary Gear
3. No.1 Thrust Washer
4. Front Planetary Ring Gear
5. Snap Ring
6. No.2 Thrust Washer
7. O-ring
8. Rear Planetary Gear
9. Rear Planetary Sun Gear
10. Thrust Bearing
11. Oil Seal Ring
12. Intermediate Shaft
13. Snap Ring
14. Rear Planetary Ring Gear
15. Ring Gear Flange
16. Snap Ring
17. Thrust Bearing
18. Output Shaft
19. Snap Ring

Figure 210. Planetary Gear, One-way Clutch and Output Shaft Assembly

Disassemble

1. Remove the rear planetary gear and output shaft assembly from the front planetary gear.

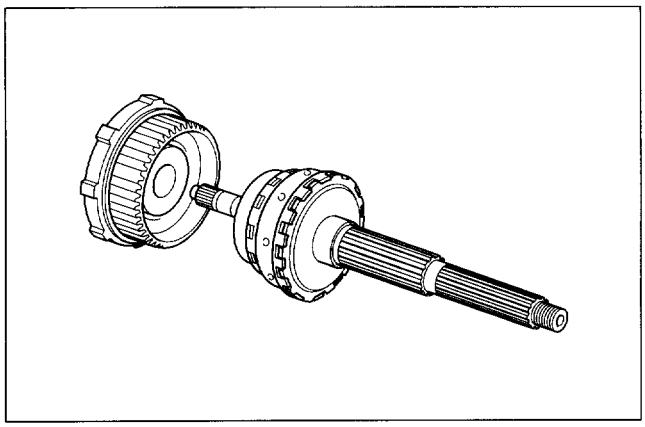

Figure 211. Rear Planetary Gear Removal

2. Remove No.1 rear thrust washer.
   Remove the thrust washer from the rear side of the front planetary gear.

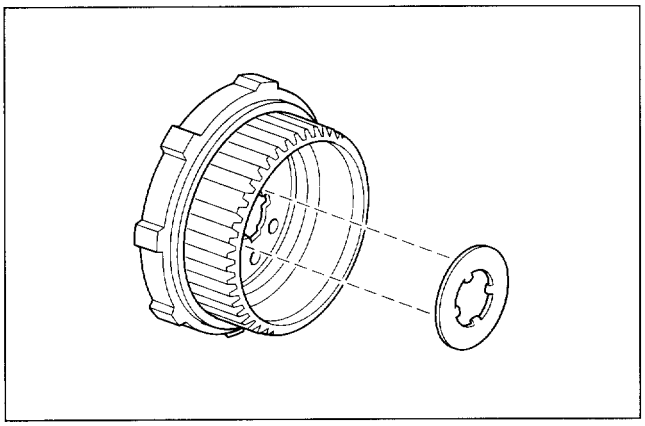

Figure 212. No.1 Thrust Washer Removal

3. Check operation of one-way clutch.
   Hold the one-way clutch outer race and turn the front planetary gear. The front planetary gear should turn freely counterclockwise and should lock clockwise.
   If operation is not as specified, replace the one-way clutch.

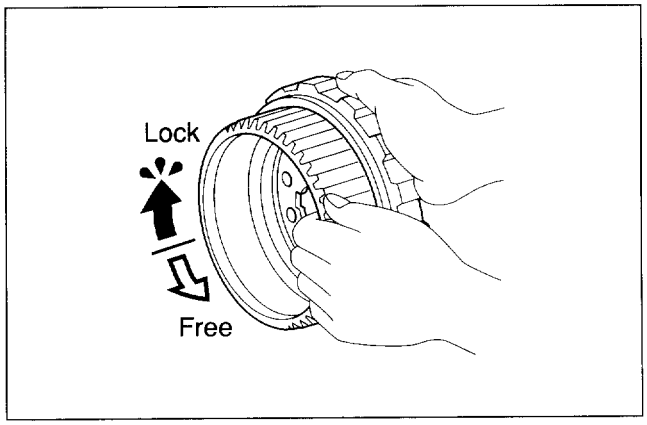

Figure 213. One-way Clutch Check

4. Remove the one-way clutch from the front planetary gear.

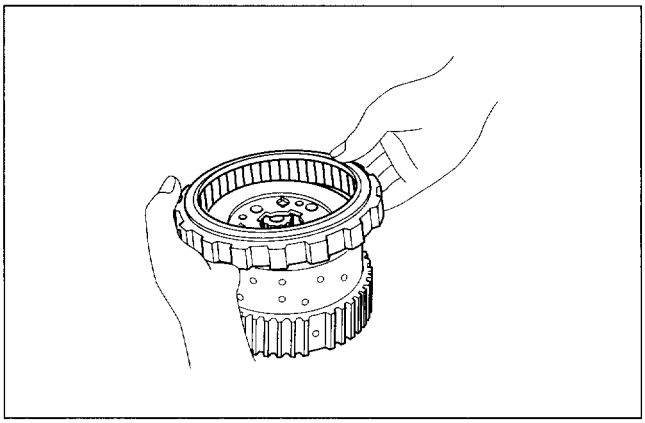

Figure 214. One-way Clutch Removal

5. Remove output shaft.
   a) Using a screwdriver, remove the snap ring.

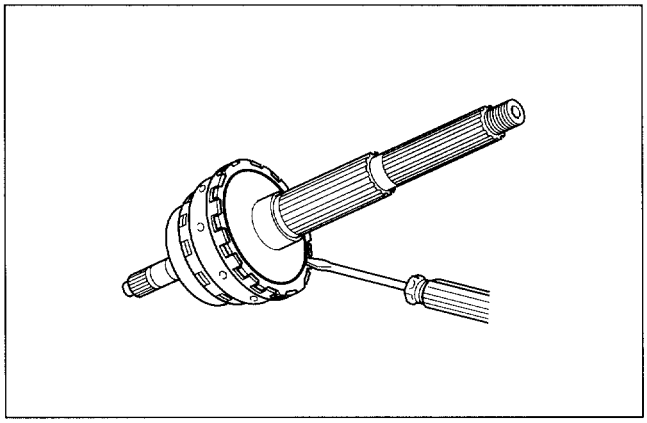

Figure 215. Output Shaft Removal (1)

   b) Remove the output shaft from the rear planetary gear.

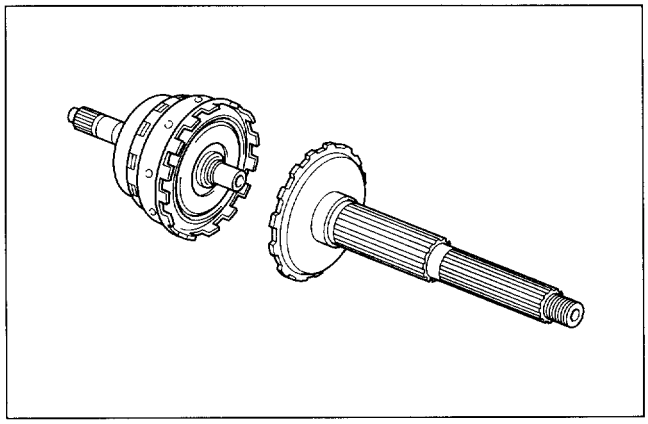

Figure 216. Output Shaft Removal (2)

   c) Remove the thrust bearing and race from the rear side of the ring gear flange.

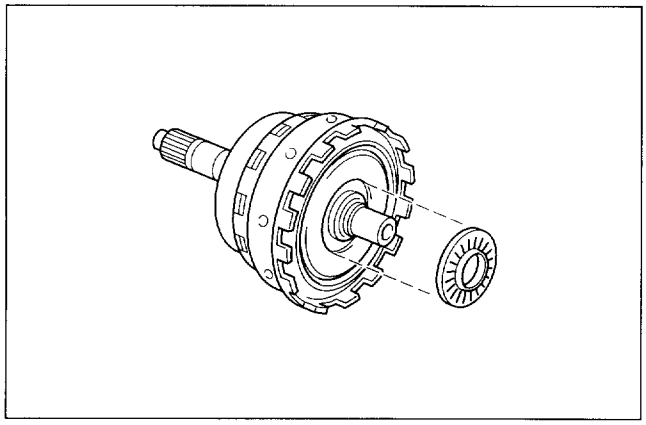

Figure 217. Thrust Bearing Removal

6. Remove rear planetary ring gear and intermediate shaft assembly.
   a) Remove the ring gear and intermediate shaft assembly from the rear planetary gear.
   NOTICE: Do not drop the planetary sun gear.

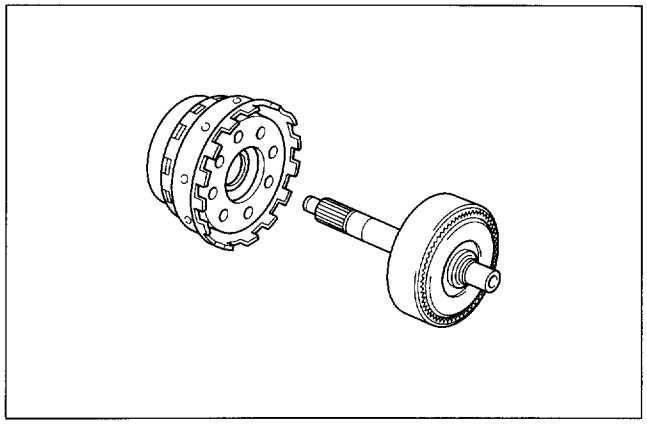

Figure 218. Ring Gear and Shaft Removal

   b) Remove the thrust bearing from the front side of the ring gear flange.

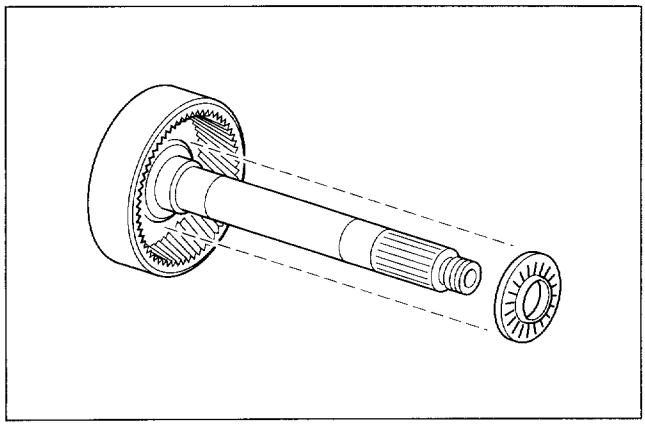

Figure 219. Thrust Bearing Removal

7. Remove the sun gear from the rear planetary gear.

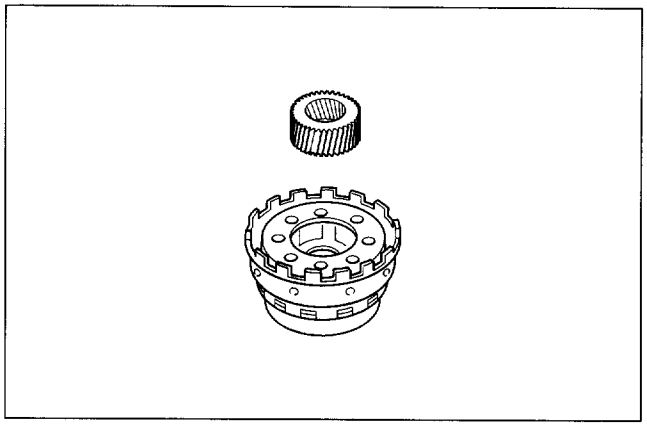

Figure 220. Sun Gear Removal

8. Remove oil seal ring.
   Using a small screwdriver, pry out the oil seal ring.

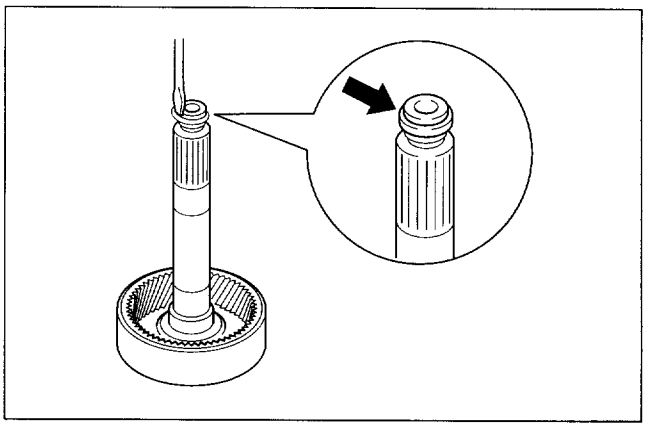

Figure 221. Oil Seal Ring Removal

9. Remove rear planetary ring gear and flange assembly.
   a) Using snap ring pliers, remove the snap ring from the rear side of the intermediate shaft.

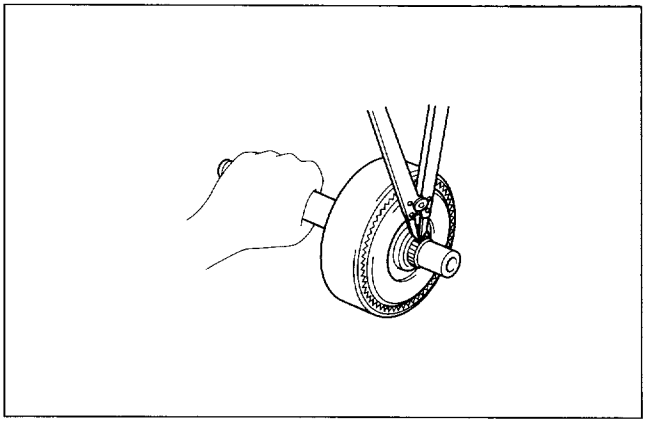

Figure 222. Snap Ring Removal

   b) Remove the ring gear and flange assembly from the intermediate shaft.

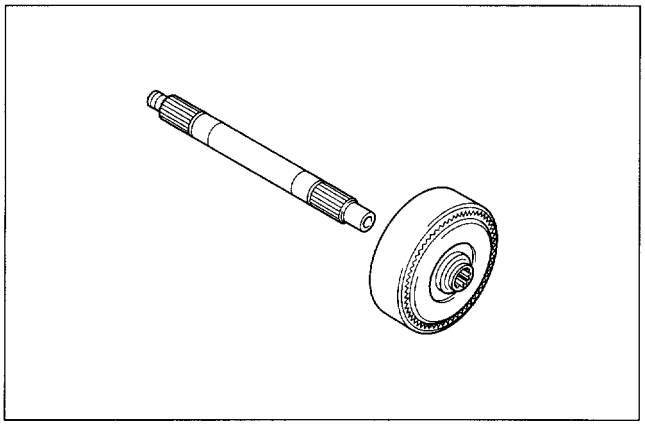

Figure 223. Ring Gear and Flange Removal

c) Using snap ring pliers, remove the snap ring from the front side of the intermediate shaft.

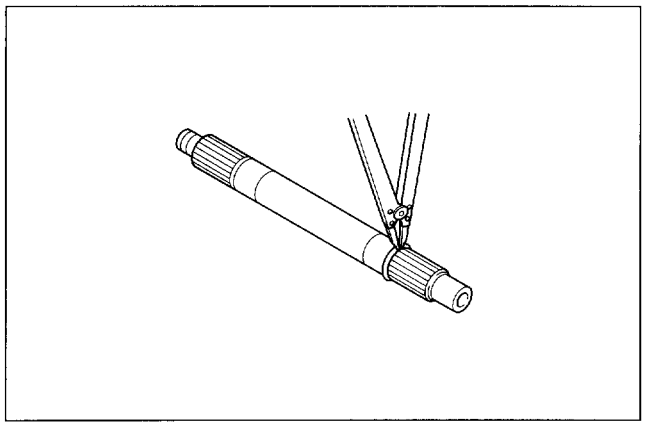

Figure 224. Snap Ring Removal

10. Remove rear planetary ring gear flange.
    a) Using a small screwdriver, remove the snap ring.

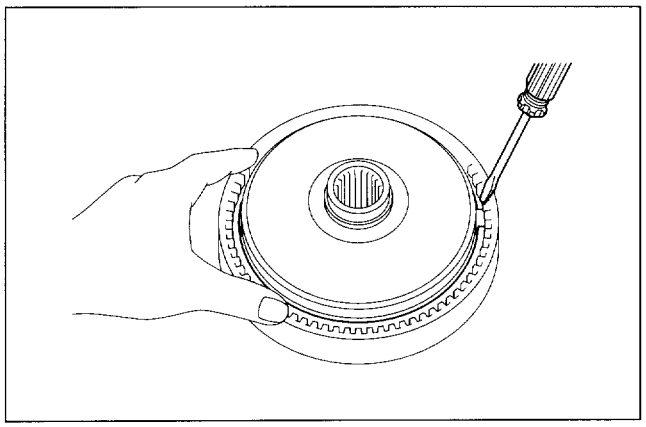

Figure 225. Ring Gear Flange Removal (1)

b) Remove the ring gear flange from the rear planetary ring gear.

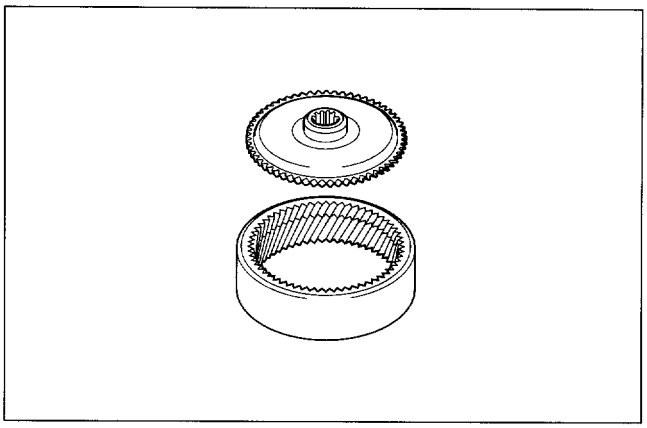

Figure 226. Ring Gear Flange Removal (2)

11. Remove front planetary ring gear.
    Using needle nose pliers, pry out the ring gear while compressing the snap ring.

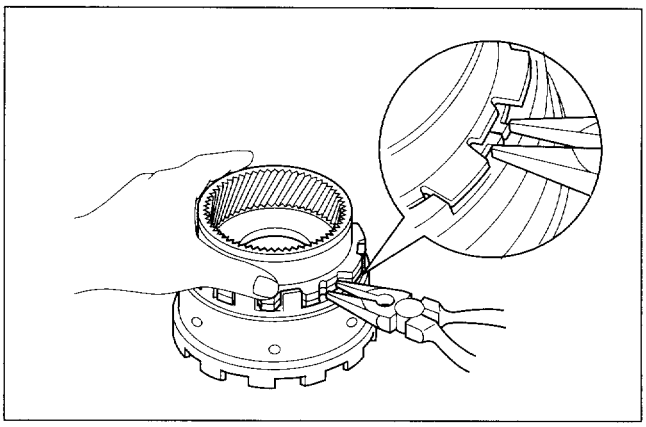

Figure 227. Ring Gear Removal

12. Using a screwdriver, remove the No.2 thrust washer from the rear planetary gear.
    CAUTION: Do not damage the No.2 thrust washer.

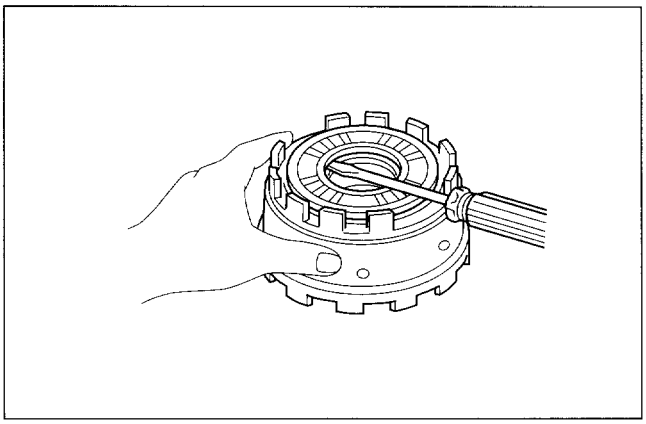

Figure 228. Thrust Washer Removal

13. Using a small screwdriver, remove the O-ring from the rear planetary gear.

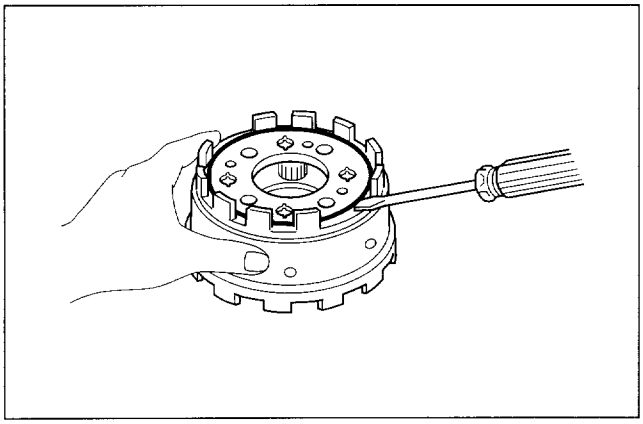

Figure 229. O-ring Removal

Inspect

1. Inspect bushing of output shaft.
   Using a dial indicator, measure the inside diameter.
   Standard inside diameter: 17.000–17.021 mm (0.6693–0.6701 in.)
   Maximum inside diameter: 17.07 mm (0.6720 in.)
   If the inside diameter is greater than maximum, replace the output shaft.
   Inspect the bushing contact surface of the intermediate shaft, when discoloration or damage on the surface is found, replace the intermediate shaft with a new one.

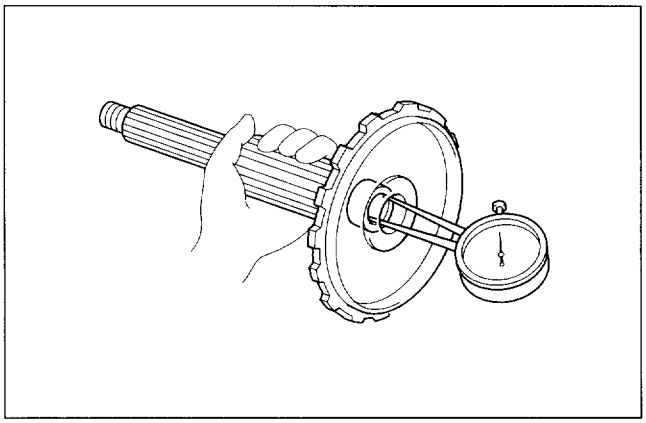

Figure 230. Bushing Inspection

2. Inspect planetary pinion gear thrust clearance.
   Using a feeler gauge, measure the thrust clearance between the pinions and carrier.
   Standrad clearance: 0.20–0.59 mm (0.0079–0.0232 in.)
   Maximum clearance: 0.75 mm (0.0295 in.)
   If the thrust clearance is greater than maximum, replace the planetary gear.

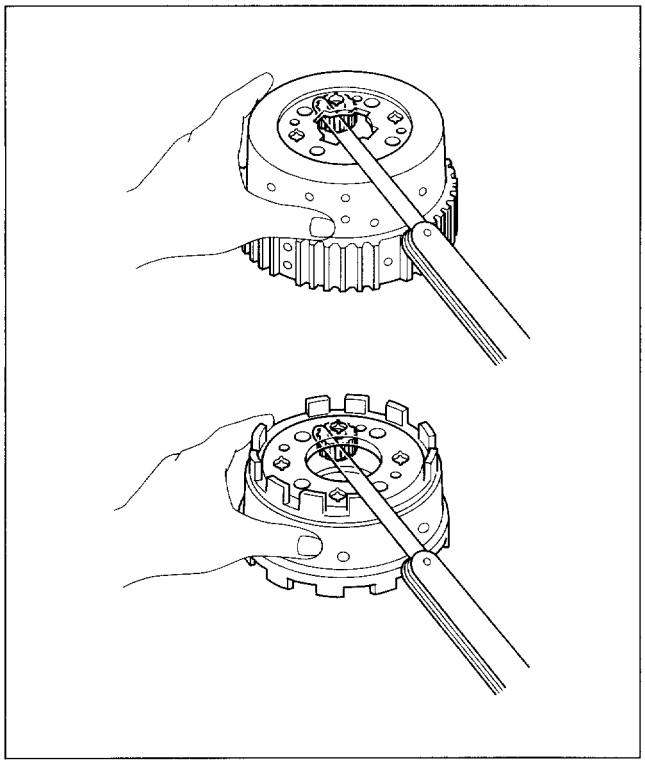

Figure 231. Thrust Clearance Inspection

Assemble

1. Install O-ring.
   Coat a new O-ring with ATF, and install it onto the rear planetary gear.
   CAUTION: Be careful not to damage the O-ring.

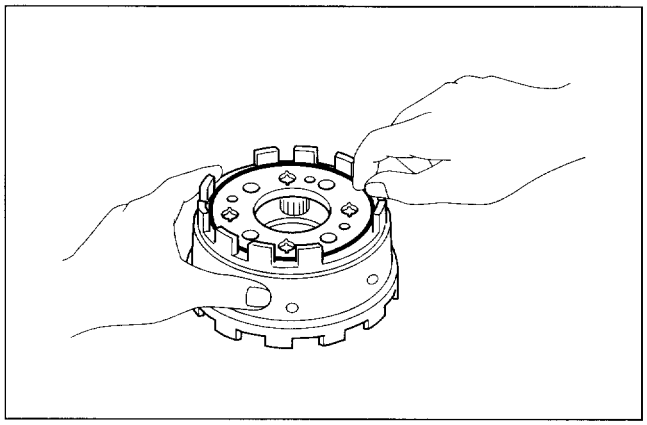

Figure 232. O-ring Installation

2. Install No.2 thrust washer.
   Coat the thrust washer with petroleum jelly, and install it onto the rear planetary gear.
   NOTICE: Securely fit the lips of the thrust washer into the holes of the rear planetary gear.

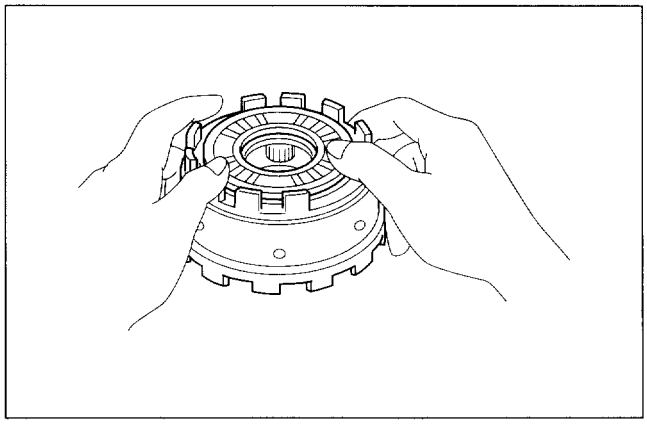

Figure 233. No.2 Thrust Washer Installation

3. Install front planetary ring gear.
   a) Align the snap ring end with the wide cutout portion of the rear planetary gear.
   b) Using needle nose pliers, compress the snap ring and then install the ring gear.
   c) Check that the snap ring is installed into the groove of the rear planetary gear.

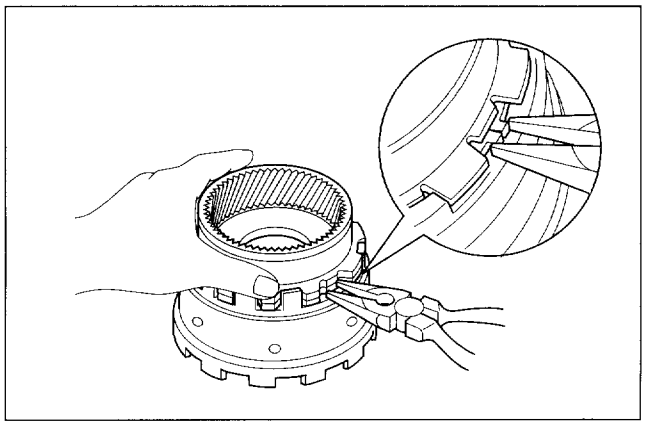

Figure 234. Ring Gear Installation

4. Install rear planetary ring gear flange.
   a) Install the ring gear flange to the rear planetary ring gear.

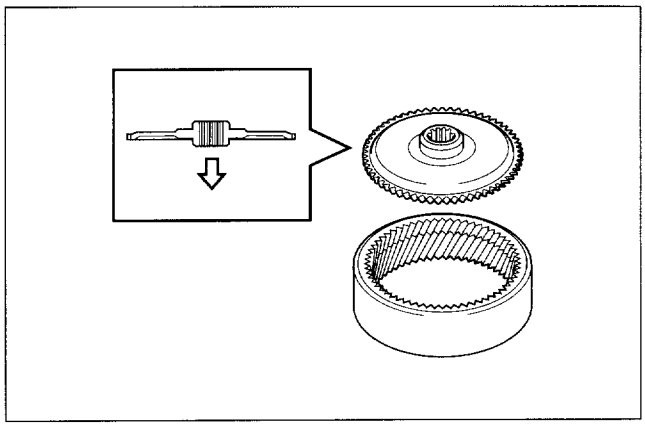

Figure 235. Ring Gear Flange Installation

   b) Using a small screwdriver, install the snap ring.

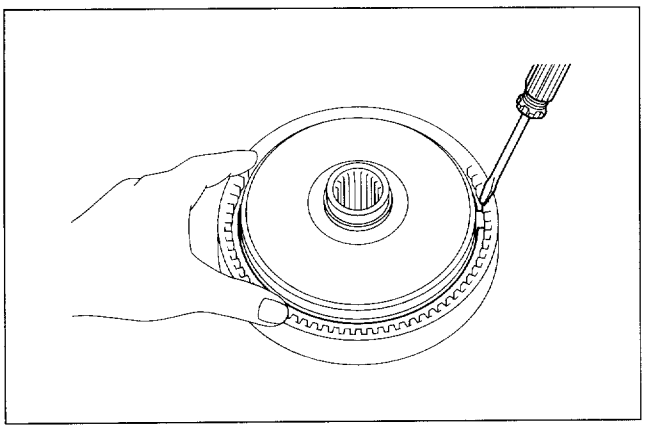

Figure 236. Snap Ring Installation

5. Install rear planetary ring gear and flange assembly.
   a) Using snap ring pliers, install the snap ring on the front side of the intermediate shaft.

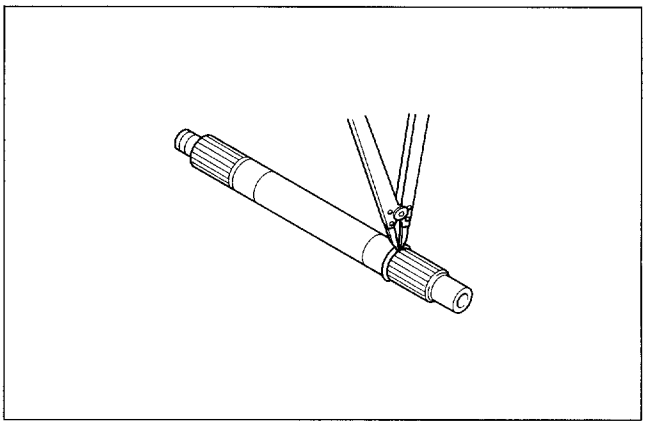

Figure 237. Snap Ring Installation

   b) Install the ring gear and flange assembly.
   c) Using snap ring pliers, install the snap ring on the rear side of the intermediate shaft.

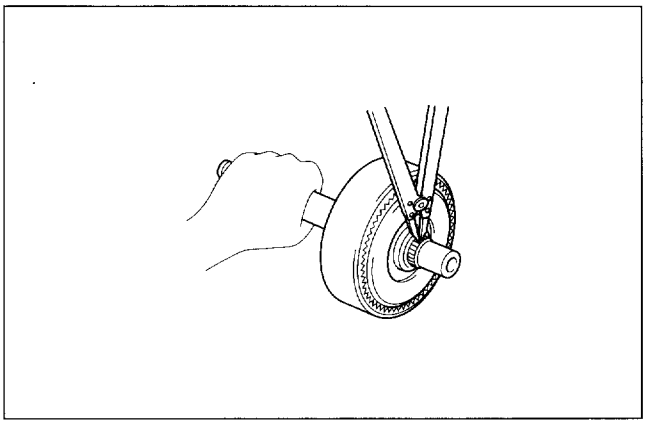

Figure 238. Snap Ring Installation

6. Install oil seal ring.
   Coat the new oil seal ring with ATF, and install it on the intermediate shaft.

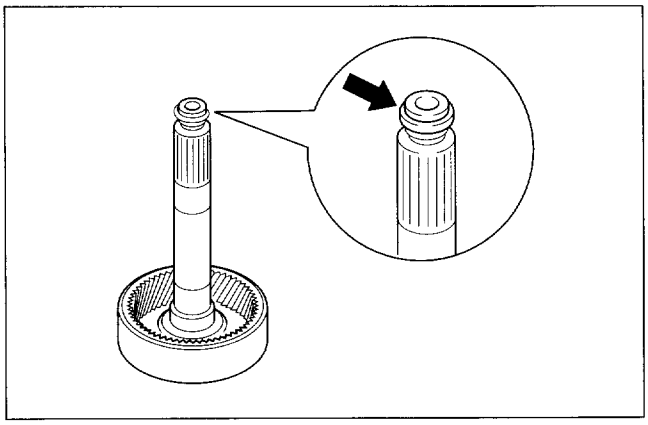

Figure 239. Oil Seal Ring Installation

7. Install rear planetary sun gear.
   Install the sun gear to the rear planetary gear.

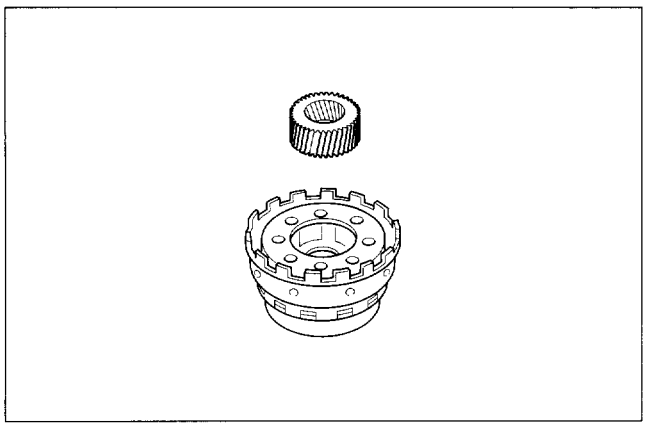

Figure 240. Sun Gear Installation

8. Install rear planetary ring gear and intermediate shaft assembly.
   a) Coat the thrust bearing with petroleum jelly.
   b) Install the thrust bearing onto the front side of the ring gear flange.

Thrust bearing diameter

Diameter mm (in.)	Inside	Outside
Bearing	32.8 (1.291)	53.2 (2.094)

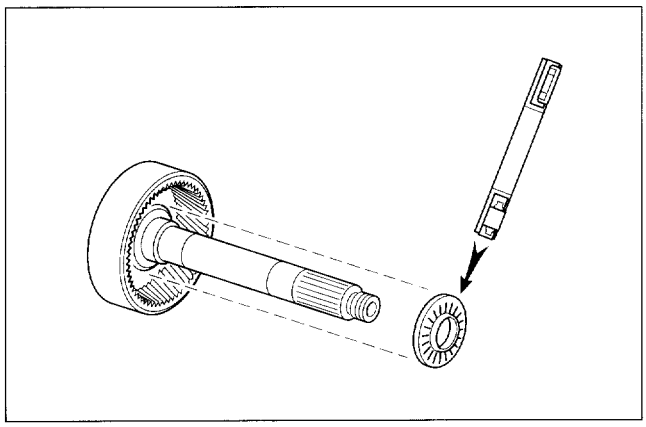

Figure 241. Thrust Bearing Installation

   c) Install the ring gear and intermediate shaft assembly to the rear planetary gear.

NOTICE: Do not drop the planetary sun gear.

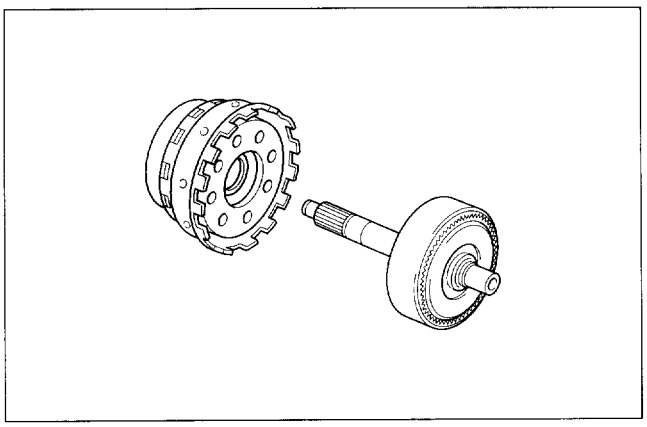

Figure 242. Ring Gear and Shaft Installation

9. Install output shaft.
   a) Coat the thrust bearing with petroleum jelly.
   b) Install the thrust bearing onto the rear side of the ring gear flange.

Thrust bearing diameter

Diameter mm (in.)	Inside	Outside
Bearing	32.8 (1.291)	53.2 (2.094)

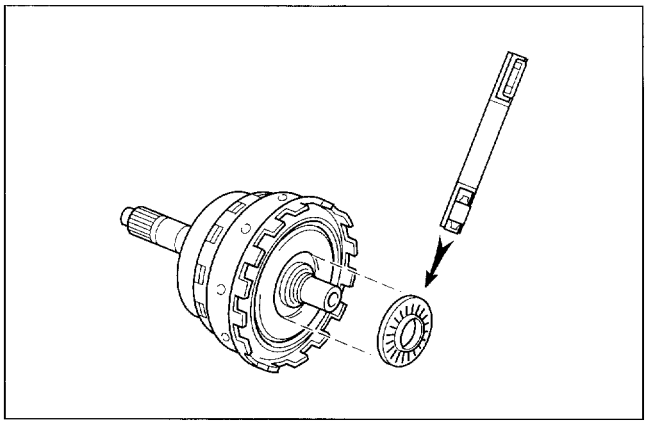

Figure 243. Thrust Bearing Installation

   c) Install the output shaft to the rear planetary gear.

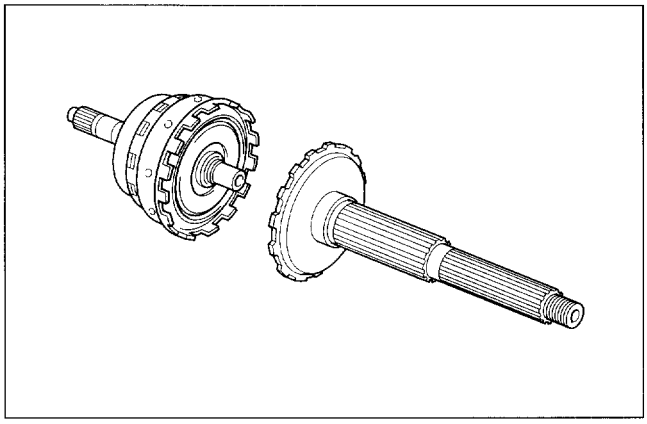

Figure 244. Output Shaft Installation

   d) Using a screwdriver, install the snap ring.

NOTICE: Be sure the end gap of the snap ring is not aligned with the cutout portion of the rear planetary gear.

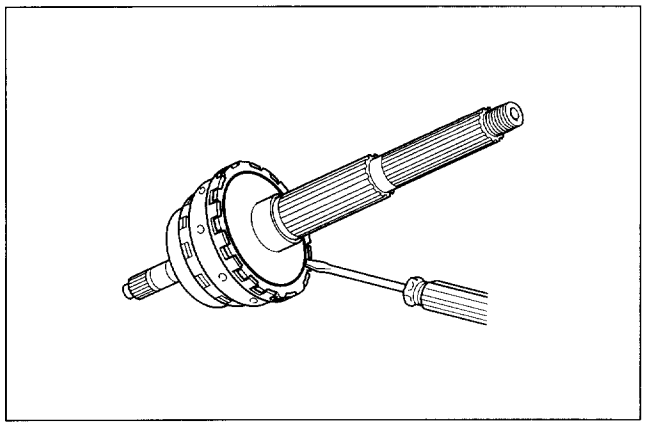

Figure 245. Snap Ring Installation

10. Install one-way clutch.
    a) Position the one-way clutch on the front planetary gear, facing the flanged side of the one-way clutch downward.
    b) Install the one-way clutch to the front planetary gear by rotating the one-way clutch counterclockwise.

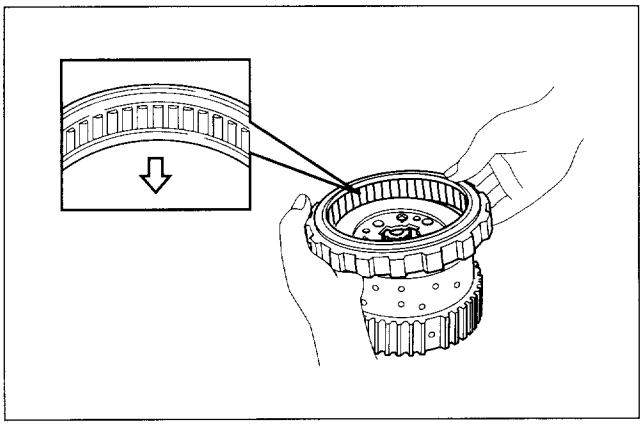

Figure 246. One-way Clutch Installation

11. Check operation of one-way clutch.
    Hold the one-way clutch outer race and turn the front planetary gear. The front planetary gear should turn freely counterclockwise and should lock clockwise.
    If operation is not as specified, replace the one-way clutch.

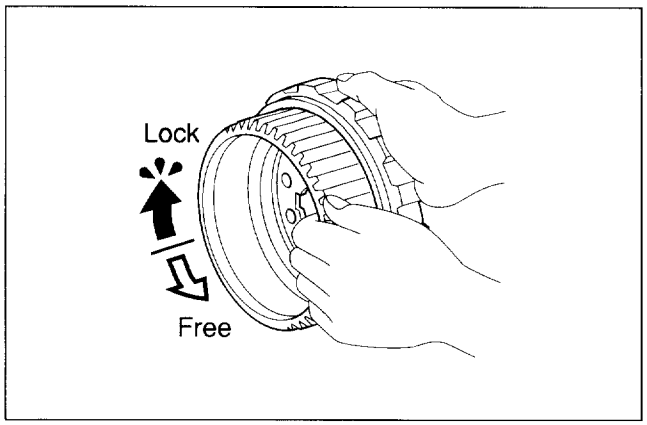

Figure 247. One-way Clutch Check

12. Install No.1 thrust washer.
    Coat the thrust washer with petroleum jelly, and install it onto the rear side of the front planetary gear.
    NOTICE: Securely fit the claws of the thrust washer into the grooves of the front planetary gear.

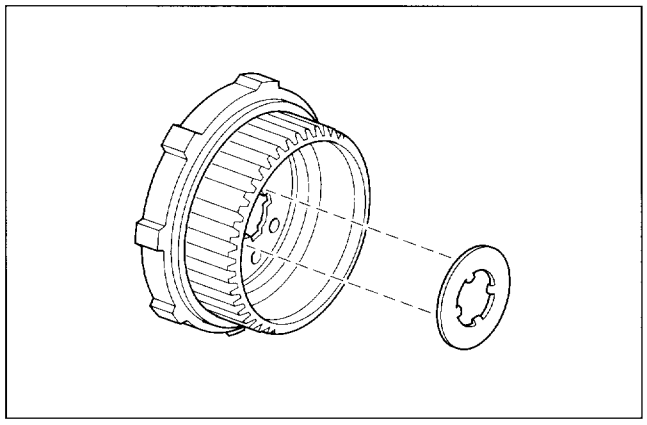

Figure 248. No.1 Thrust Washer Installation

13. Install the rear planetary gear and output shaft assembly to the front planetary gear.

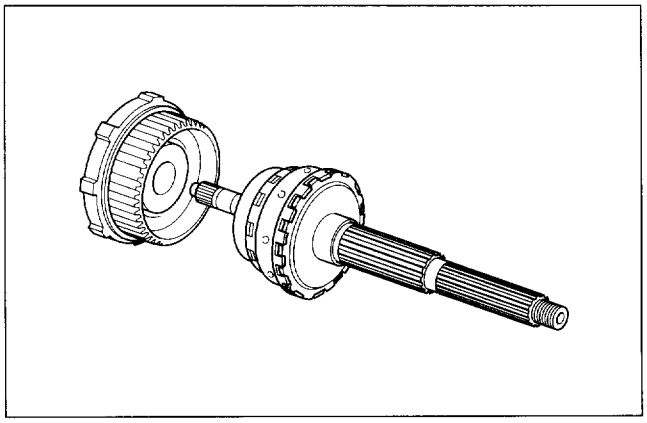

Figure 249. Planetary Gear and Shaft Installation

FIRST AND REVERSE BRAKE

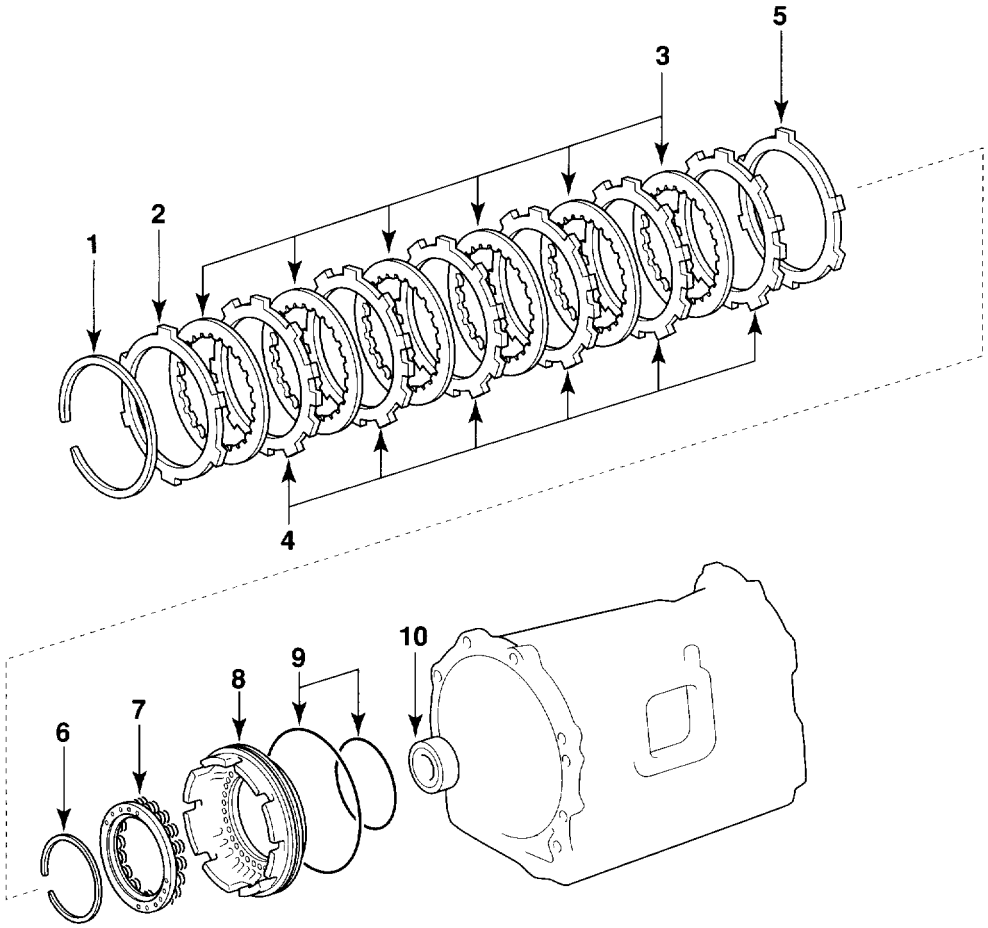

1. Snap Ring
2. Flange
3. Disc
4. Plate
5. Cushion Plate
6. Snap Ring
7. Piston Return Spring
8. First and Reverse Brake Piston
9. O-ring
10. Output Shaft Front Bearing

Figure 250. First and Reverse Brake Assembly

Disassemble

1. Check piston stroke of first and reverse brake piston.
   a) Using the No.2 measure terminal and a dial indicator, measure the piston stroke by applying and releasing the compressed air 392–785 kPa (4–8 kg/cm^2, 57–114 psi).

   Tool Required:
   5-8840-2650-0 No.2 Measure Terminal

   Piston stroke: 3.30–3.80 mm (0.1299–0.1496 in.)

NOTICE:
- **Stand the measure terminal on the piston vertically.**
- **Ensure that the measure terminal does not touches other parts than the piston.**
- **Measure the stroke at more than 3 points.**

If the piston stroke is not as specified, inspect the discs.

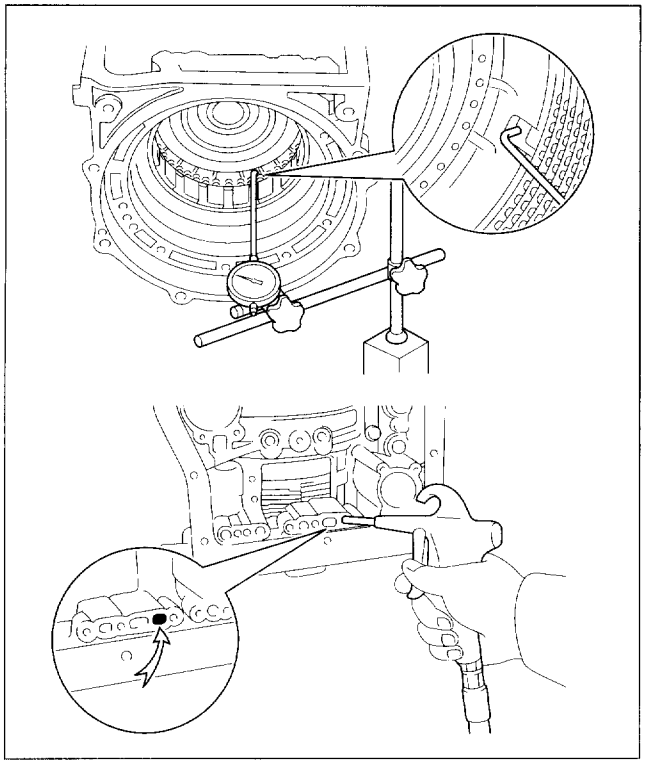

Figure 251. Piston Stroke Check

2. Remove flange, discs, plates and cushion plate.
   a) Using screwdriver, remove the snap ring.

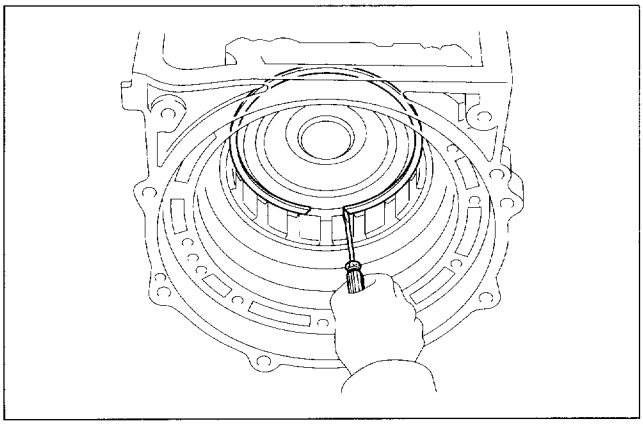

Figure 252. Snap Ring Removal

   b) Remove flange, 6 discs, 6 plates and cushion plate.

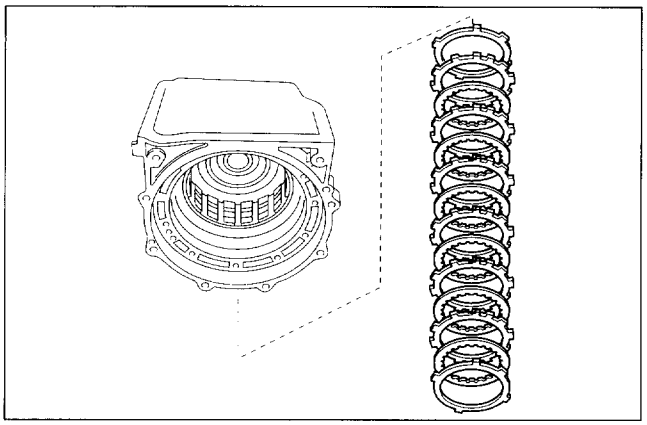

Figure 253. Flange, Disc, Plate and Cushion Plate

3. Remove piston return spring.
   a) Set the No.1 piston spring compressor on the spring retainer, and compress the return spring.

   Tool Required:

   5-8840-2643-0 No.1 Piston Spring Compressor

   NOTICE: Stop compressing the return spring at the position 1 to 2 mm away from the snap ring to prevent the spring sheet from being deformed.

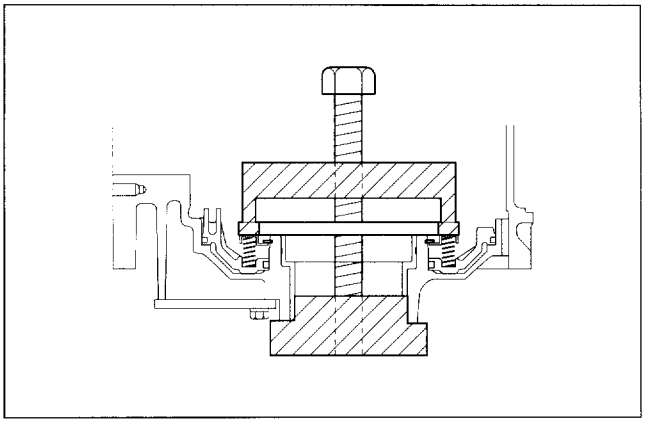

Figure 254. Return Spring Removal (1)

   b) Using a snap ring pilers, remove the snap ring.

   CAUTION: Do not damage the snap ring and do not defrom them unless necessary.

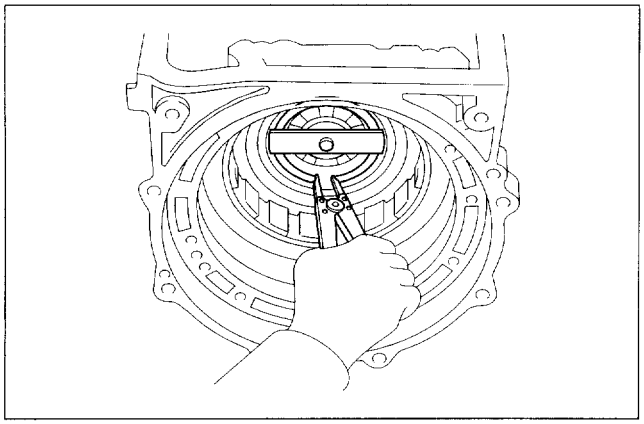

Figure 255. Return Spring Removal (2)

c) Remove the piston return spring.

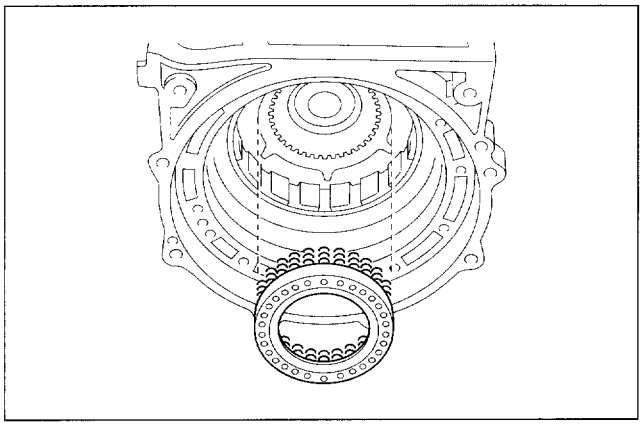

Figure 256. Return Spring Removal (3)

4. Remove first and reverse brake piston.
   a) Hold first and reverse brake piston with hand, remove first and reverse brake piston by applying compressed air 392–785 kPa (4–8 kg/cm², 57–114 psi) into the oil hole of the transmission case.
   b) Remove the 2 O-rings from brake piston.

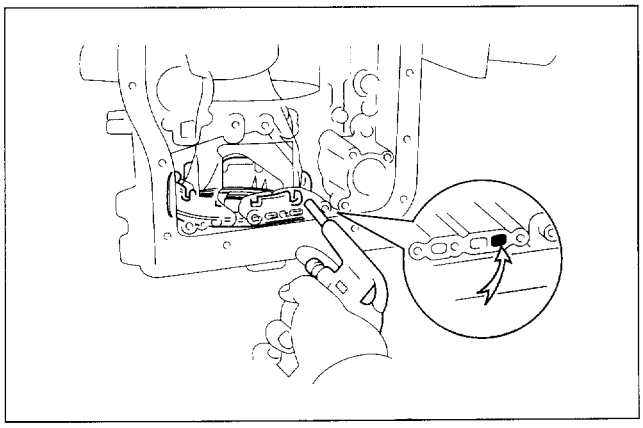

Figure 257. Brake Piston Removal

Inspect

Inspect discs, plates and cushion plate.
Check to see of the contacting surface of the disc, plate and flange are worn or burnt. If necessary, replace them.

NOTICE:

- **If the lining of the disc is peeling off or discolored, or even if a part of the printed numbers are defaced, replace all discs.**
- **Before assembling new discs, soak them in ATF for at least 15 minutes.**

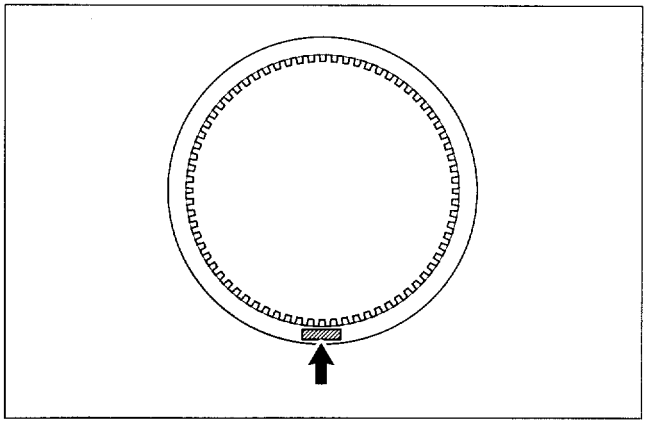

Figure 258. Disc Inspection

Output shaft front bearing replacement

1. Remove output shaft front bearing.
   Using oil seal installer (for oil pump), steel plate and a shop press, press out the bearing.
   Tool Required:
   5-8840-2644-0 Oil Seal Installer

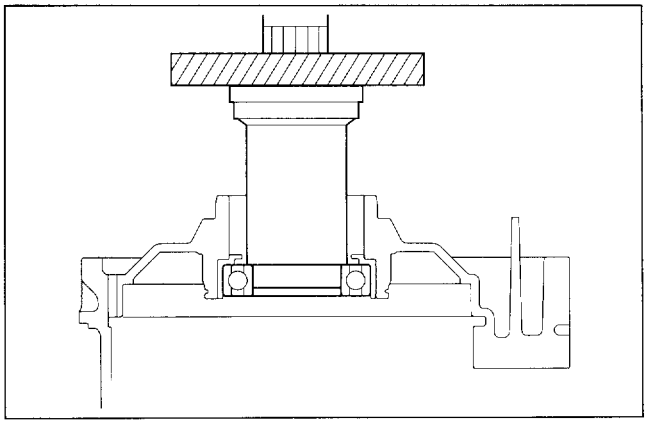

Figure 259. Bearing Replacement (1)

2. Install output shaft front bearing.
   a) Using the bearing installer, handle and a shop press, press in the new bearing.
   Tool Required:
   5-8840-2645-0 Handle
   5-8840-2646-0 Oil Seal Installer

b) Check that the bearing rotates smoothly.

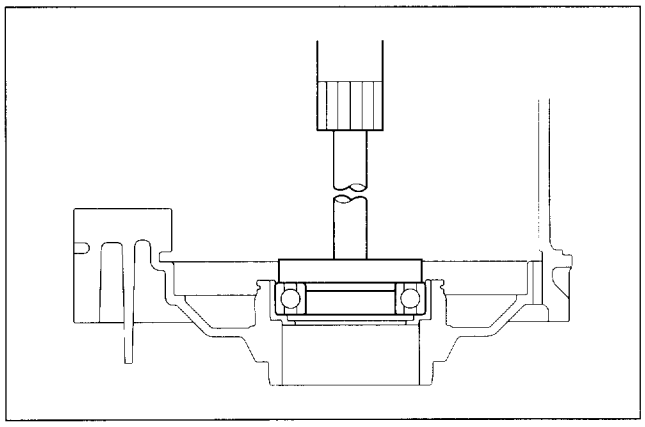

Figure 260. Bearing Replacement (2)

Reassemble

1. Install first and reverse brake piston.
   a) Coat the new 2 O-rings with ATF, and install them in the first and reverse brake piston.

O-ring diameter mm (in.)

	Inside	Wire diameter
Inner side	94.4 (3.7165)	3.1 (0.1221)
Outer side	163.7 (6.4449)	3.1 (0.1221)

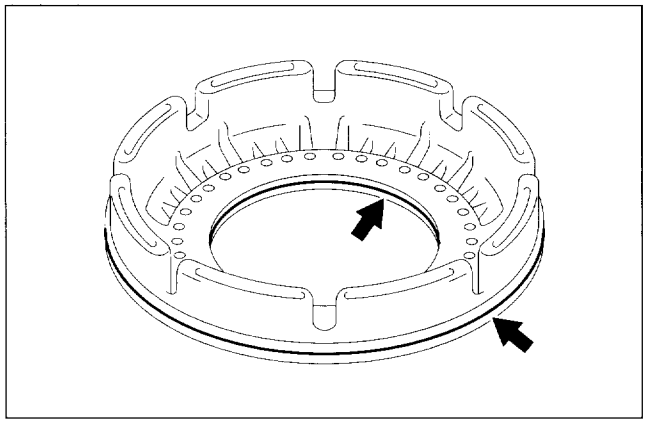

Figure 261. O-ring Location

   b) Using the No.1 piston spring compressor and the handle, push in the brake piston.

Tool Required:
5-8840-2643-0 No.1 Piston Spring Compressor
5-8840-2645-0 Handle

CAUTION: Be careful not to damage the O-ring.

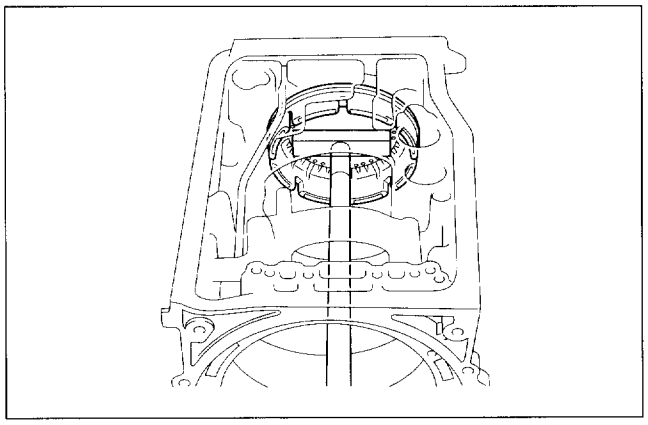

Figure 262. Brake Piston Installation

2. Install piston return spring.
   a) Place the return spring on the brake piston.

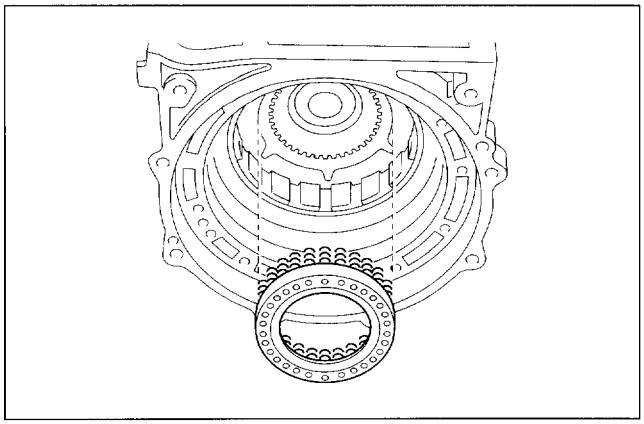

Figure 263. Return Spring Installation (1)

b) Using No.1 piston spring compressor, compress the return spring.

NOTICE: Stop compressing the return spring at the position 1 to 2 mm away from the snap ring to prevent the spring sheet from being deformed.

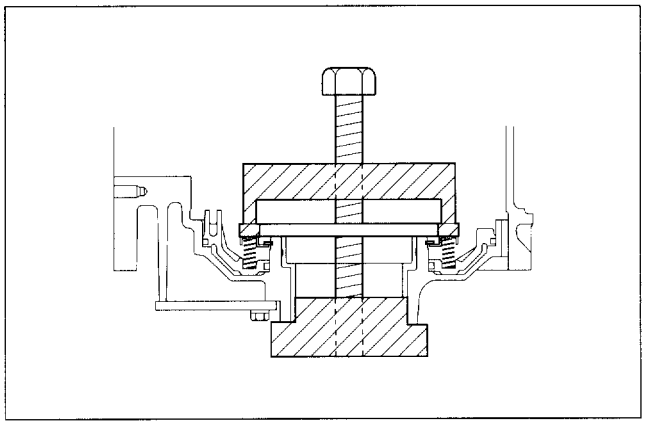

Figure 264. Return Spring Installation (2)

c) Using snap ring pliers, install the snap ring.

NOTICE: If the snap ring are damaged or deformed, replace it with a new one.

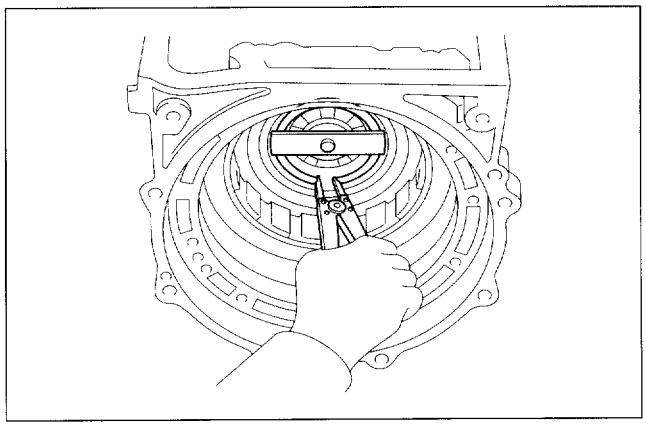

Figure 265. Return Spring Installation (3)

3. Install cushion plate, plates, discs and flange.
   a) Install the cushion plate, facing the rounded edge inward.

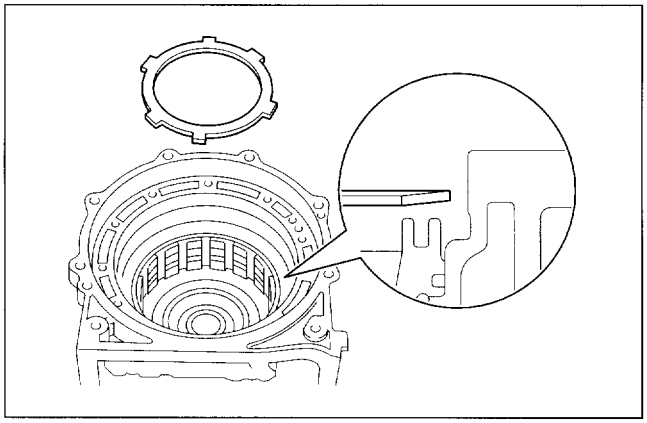

Figure 266. Cushion Plate Installation

b) Install the 6 plates and 6 discs in order:
P = Plate D = Disc
P – D – P – D – P – D – P – D – P – D

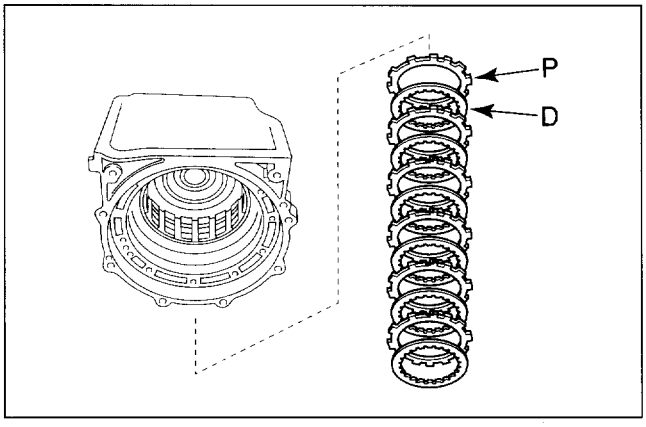

Figure 267. Plate and Disc Installation

c) Install the flange, facing the rounded edge outward.

NOTICE: If the flange is step-edged, install the flange with the step-edge, facing inward.

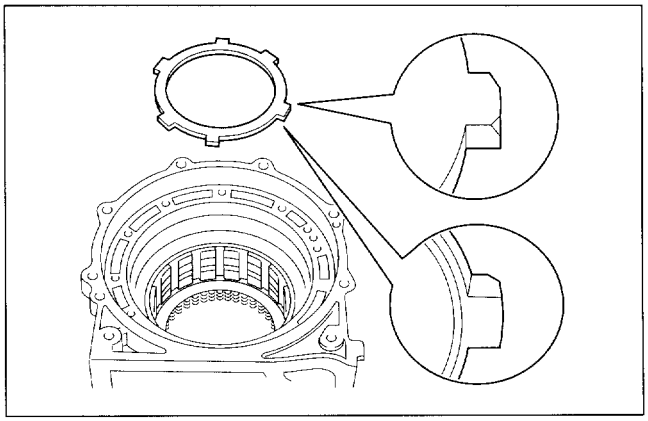

Figure 268. Flange Direction

d) Using screwdriver, install the snap ring.
NOTICE: Be sure the end of the snap ring is not aligned with the cutout portion of the transmission case.

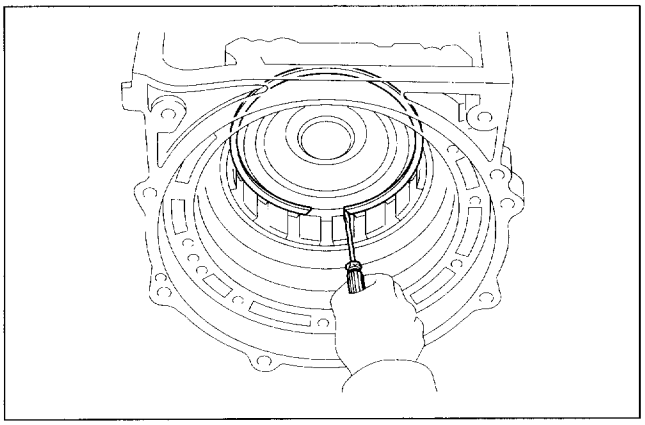

Figure 269. Snap Ring Installation

4. Check piston stroke of first and reverse brake.
   a) Using No.2 measure terminal and a dialindicator, measure the piston stroke by applying and releasing the compressed air 392–785 kPa (4–8 kg/cm², 57–114 psi).

   Tool Required:
   5-8840-2650-0 No.2 Measure Terminal

   Piston stroke: 3.3–3.8 mm (0.130–0.150 in.)

   NOTICE:
   - **Stand the measure terminal on the piston vertically.**
   - **Ensure that the measure terminal does not touches other parts than the piston.**
   - **Measure the stroke at more than 3 points.**

   If the piston stroke is less than specified, parts may have been assembled incorrectly, check and reassemble again.
   If the piston stroke is not as specified, select another flange.

Flange thickness mm (in.)

No.	Thickness
E	6.65 (0.2618)
F	7.05 (0.2776)
G	7.45 (0.2933)

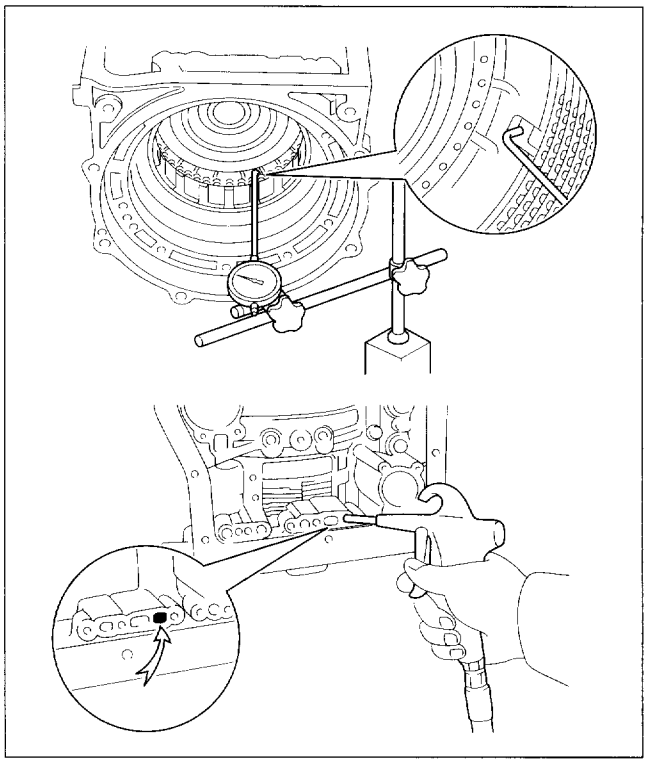

Figure 270. Piston Stroke Check

VALVE BODY

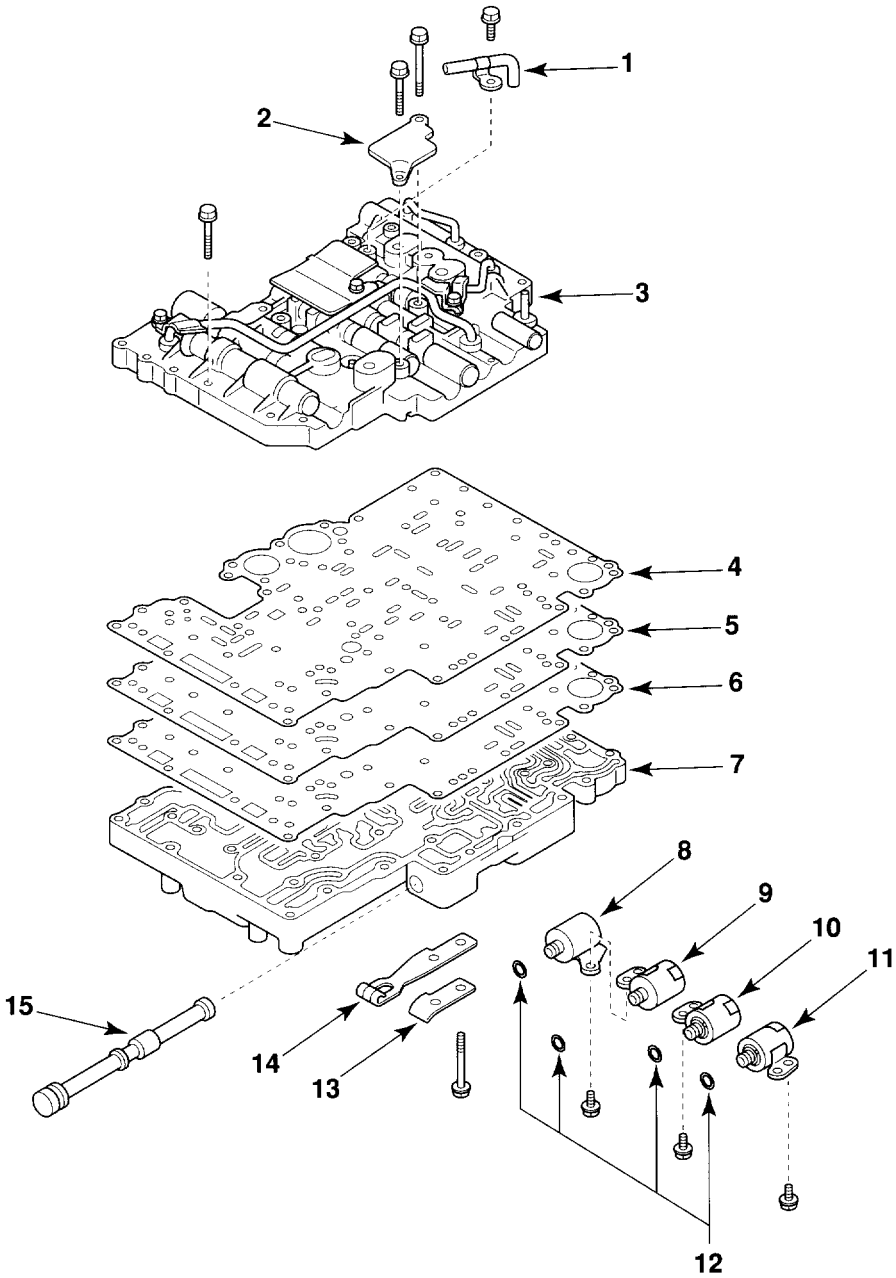

1. Drain Tube
2. Plate
3. Upper Valve Body
4. No.1 Gasket
5. Plate
6. No.2 Gasket
7. Lower Valve Body
8. Lock Up Solenoid
9. Timing Solenoid
10. No.2 Shift Solenoid
11. No.1 Shift Solenoid
12. O-ring
13. Spring Cover
14. Manual Detent Spring
15. Manual Valve

Figure 271. Valve Body Assembly

Disassemble

1. Remove the bolt and the drain tube.

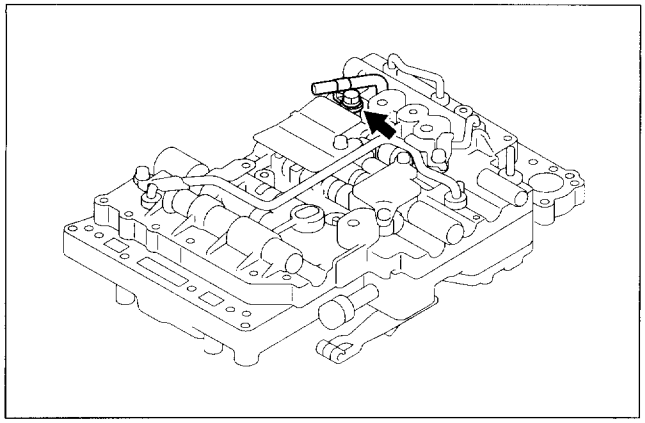

Figure 272. Drain Tube Removal

2. Remove the manual valve.

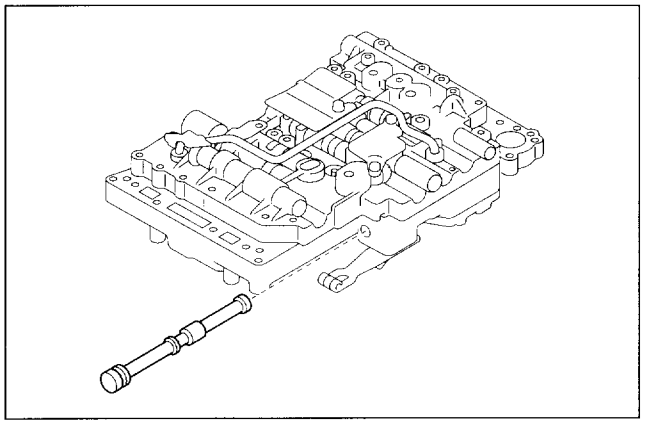

Figure 273. Manual Valve Removal

3. Remove manual detent spring.
   a) Turn over the valve body assembly.
   b) Remove the bolt, spring cover and detent spring.

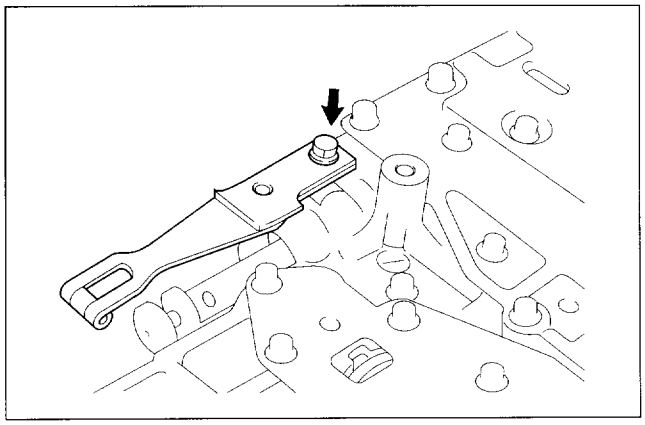

Figure 274. Detent Spring Removal

4. Remove 4 solenoid valves.
   a) Remove the 2 bolts, the No.1 and No.2 solenoids.
   b) Remove the 2 O-rings from them.

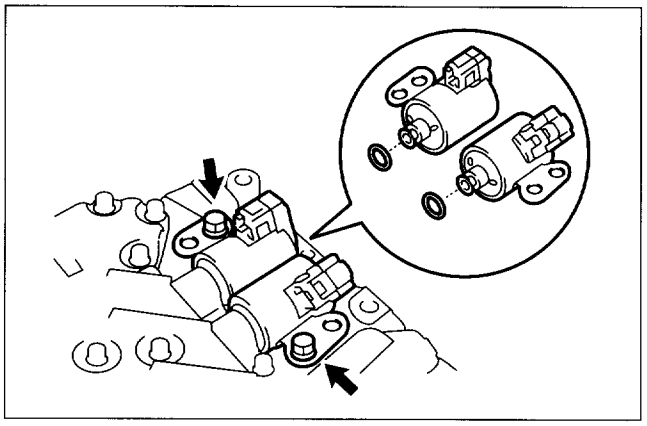

Figure 275. Solenoid Removal (1)

   c) Remove the bolt, the timing and lockup solenoids.
   d) Remove the 2 O-rings from them.

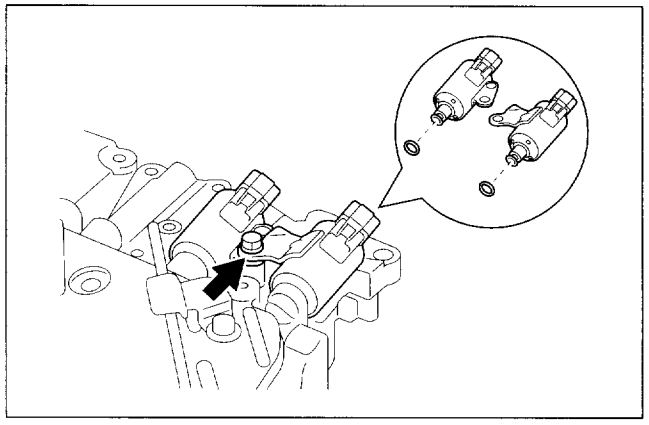

Figure 276. Solenoid Removal (2)

5. Separate upper and lower valve bodys.
   a) Remove the 12 bolts, and wave washers from the lower valve body.

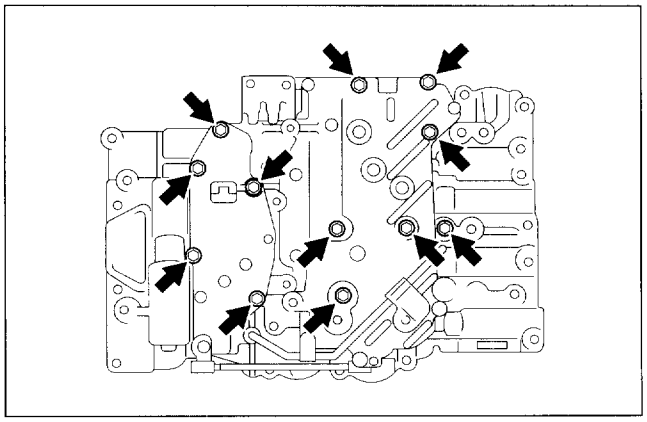

Figure 277. Lower Valve Body Bolts

b) Remove 2 bolts and plates.

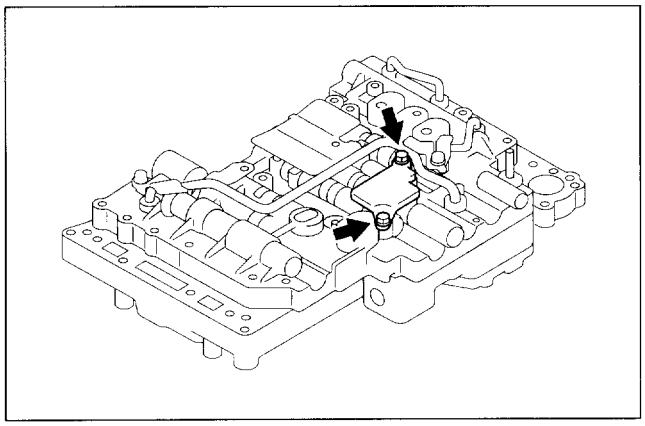

Figure 278. Plate Removal

c) Remove the 16 bolts from the upper valve body.

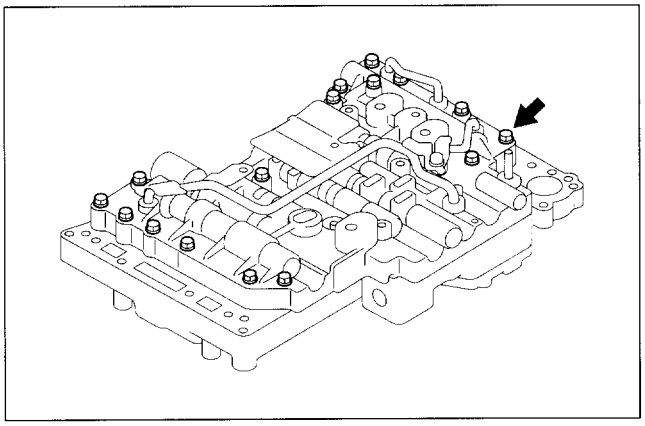

Figure 279. Upper Valve Body Bolts

d) Remove the upper valve body together with the 2 gaskets and plate.
e) Remove the 2 gaskets and plate from the upper valve body.

NOTICE: Be careful that the check balls, springs and check valves do not fall out from the lower valve body.

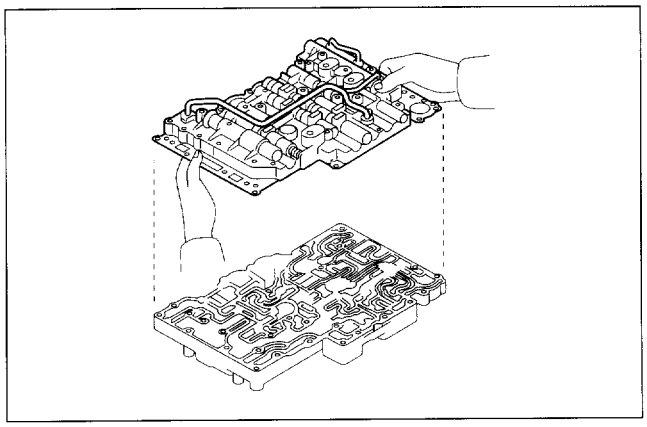

Figure 280. Upper Valve Body Removal

Assemble

1. Install valve body plate and gaskets.
NOTICE: If there is dirt on the valve body, wash the valve body clean and install it.

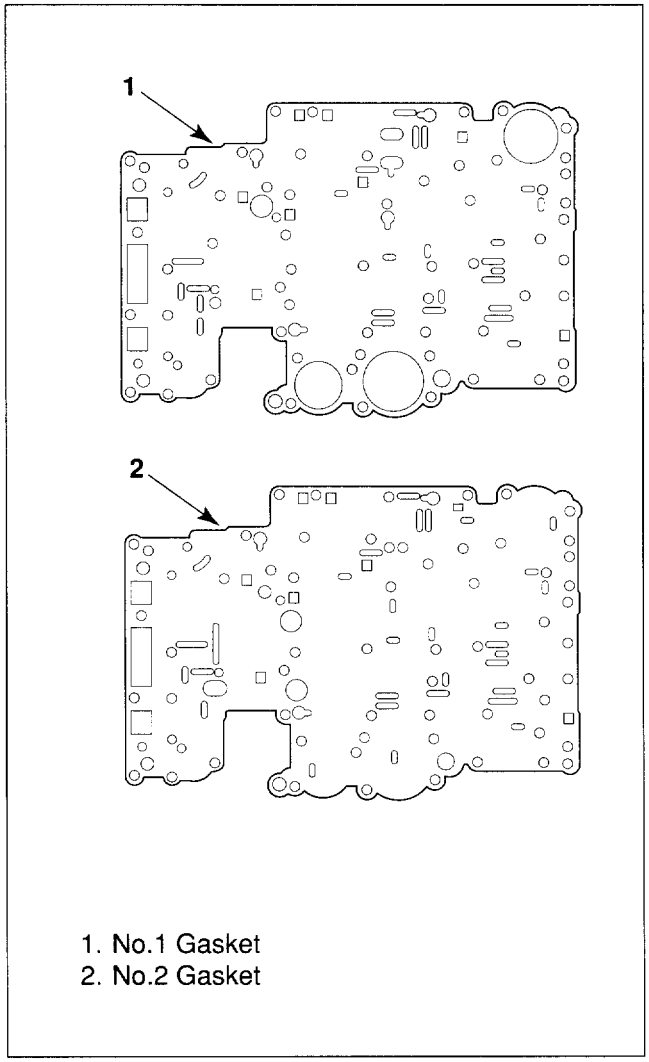

1. No.1 Gasket
2. No.2 Gasket

Figure 281. Gasket

a) Place a new No.1 gasket, plate and a new No.2 gasket on the lower valve body.

NOTICE: Since No.1 and No.2 gaskets look similar, use the illustrations above to differentiate between them.

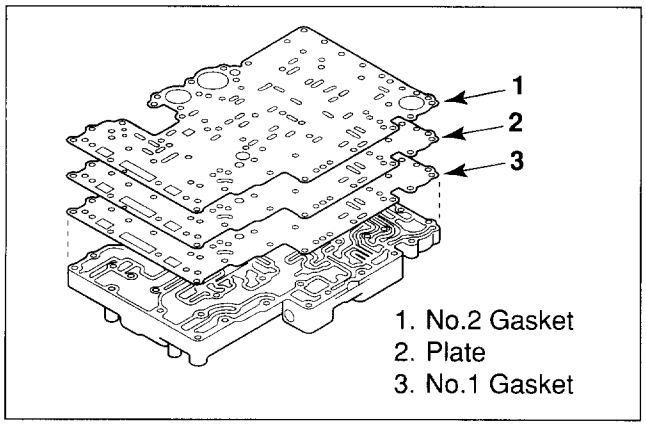

Figure 282. Gasket and Plate Installation

2. Install lower valve body.
   a) Turn over the valve body assembly together with the plate and 2 gaskets.
   NOTICE: Be careful that the check balls, check valve and spring do not fall out.
   b) Place the lower valve body on the upper valve body.

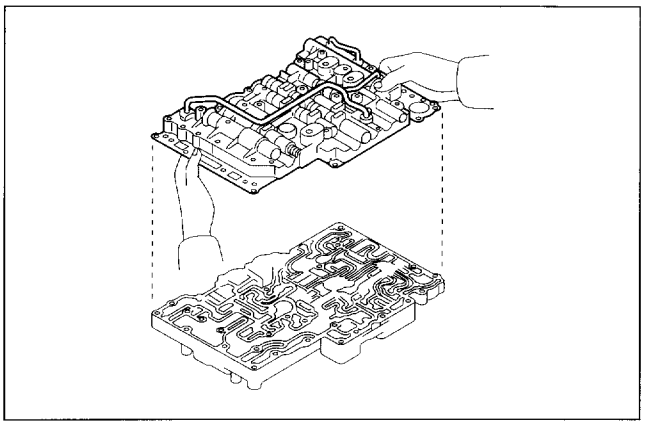

Figure 283. Lower Valve Body Installation

   c) Install the 2 bolts and 2 washers indicated as "C" in the illustration and tighten them temporarily.
   d) Install and tighten the rest of 10 bolts temporarily.
   NOTICE: Each bolt length (mm) is indicated in the illustration.
   Bolt length:
   A 50 mm (1.97 in.)
   B 42 mm (1.65 in.)
   C 50 mm (1.97 in.) with washer
   D 50 mm (1.97 in.)
   E 53 mm (2.09 in.)

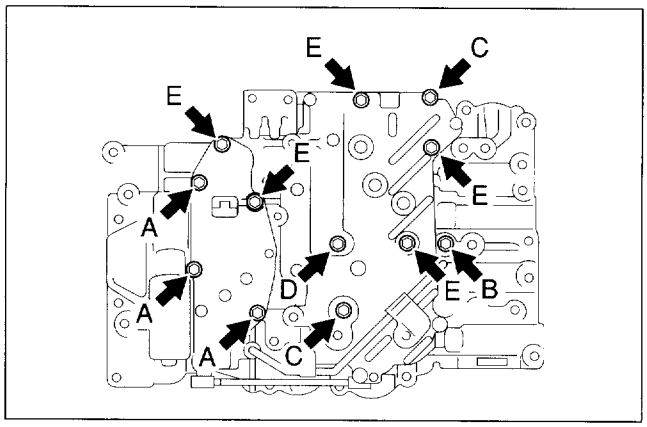

Figure 284. Lower Valve Body Bolts

3. Install upper valve body.
   a) Turn over the valve body assembly.
   b) Install the 2 bolts and 2 washers indicated as "C" in the illustration and tighten them temporarily.
   c) Install and tighten the rest of 14 bolts temporarily.
   NOTICE: Each bolt length (mm) is indicated in the illustration.
   Bolt length:
   A 28 mm (1.10 in.)
   B 32 mm (1.26 in.)
   C 36 mm (1.42 in.) with washer
   D 40 mm (1.57 in.)

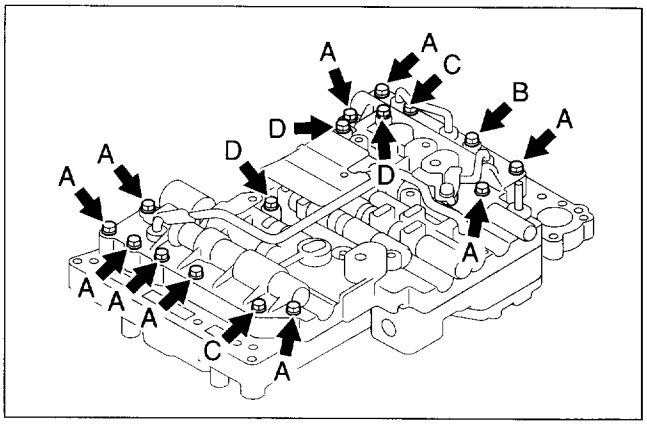

Figure 285. Upper Valve Body Bolts

4. Install the plate and tighten the 2 bolts temporarily.
   NOTICE: Each bolt length (mm) is indicated in the illustration.
   Bolt length:
   A 42 mm (1.65 in.)
   B 50 mm (1.97 in.)

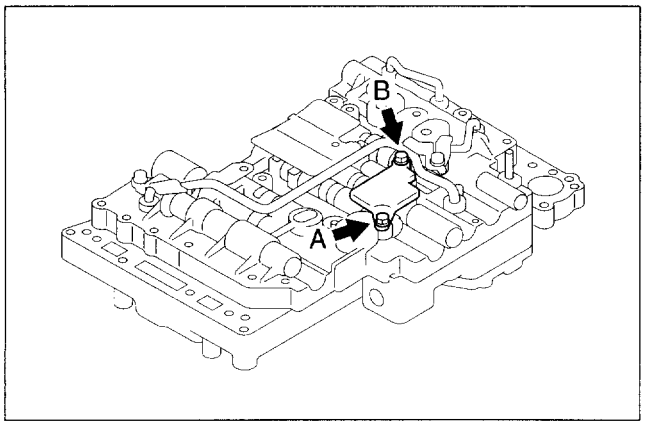

Figure 286. Plate Installation

5. Tighten bolts of upper and lower valve bodies.
   Upper side: Tighten the 16 bolts.

Tighten

Torque: 5.5 N·m (55 kg·cm, 48 lb·in)

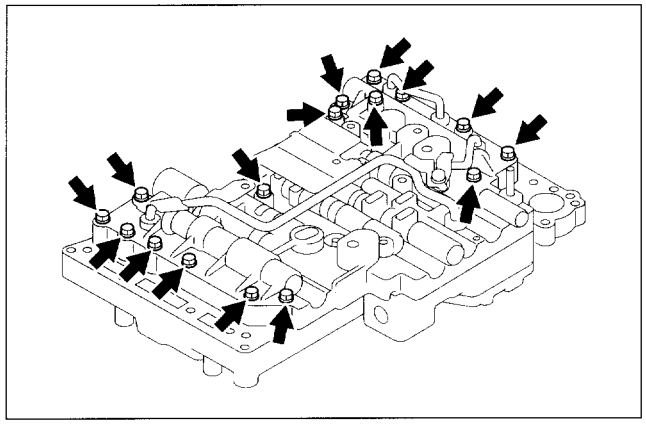

Figure 287. Upper Side Bolts

Lower side: Tighten the 12 bolts.

Tighten

Torque: 5.5 N·m (55 kg·cm, 48 lb·in)

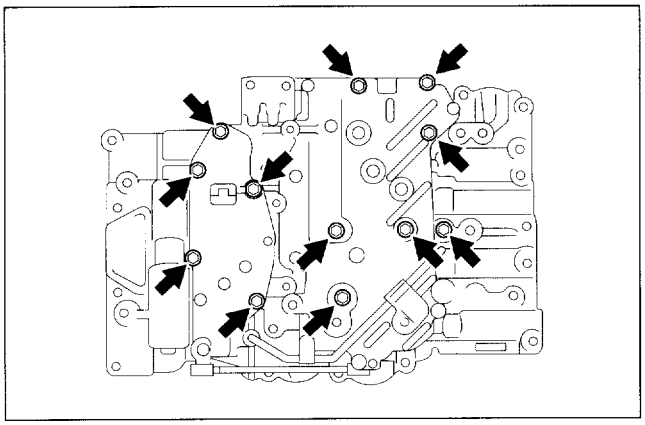

Figure 288. Lower Side Bolts

6. Install 4 solenoid valves.
   a) Coat the 2 O-rings with ATF, install them to the No.1 and No.2 solenoids.
   b) Install the No.1 and No.2 solenoids with the 2 bolts.

Tighten

Torque: 10 N·m (1.0 kg·m, 87 lb·in)

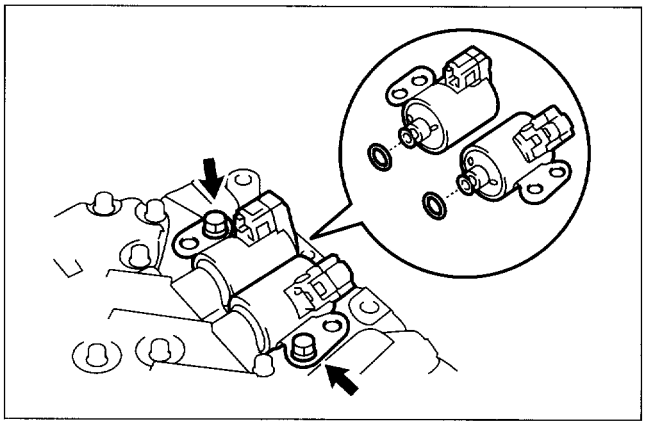

Figure 289. Solenoid Installation (1)

   c) Coat the 2 O-rings with ATF, install them to the timing and lockup solenoids.
   d) Install the timing and lockup solenoids.

Tighten

Torque: 10 N·m (1.0 kg·m, 87 lb·in)

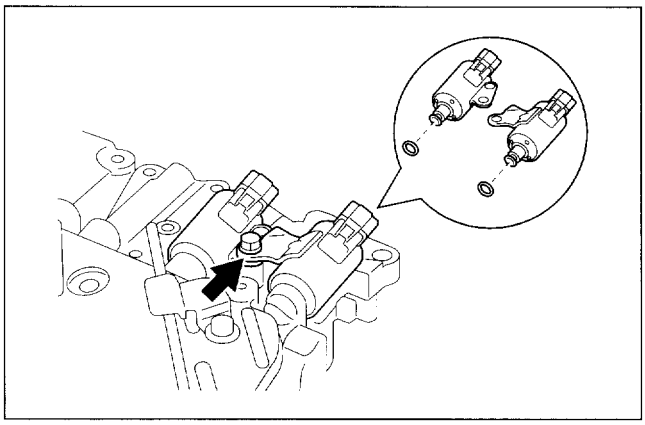

Figure 290. Solenoid Installation (2)

7. Install manual detent spring.
   Install the detent spring and cover with the bolt.

Tighten

Torque: 5.5 N·m (55 kg·cm, 48 lb·in)
NOTICE: Use the bolt which is 43 mm (1.69 in.) in length.

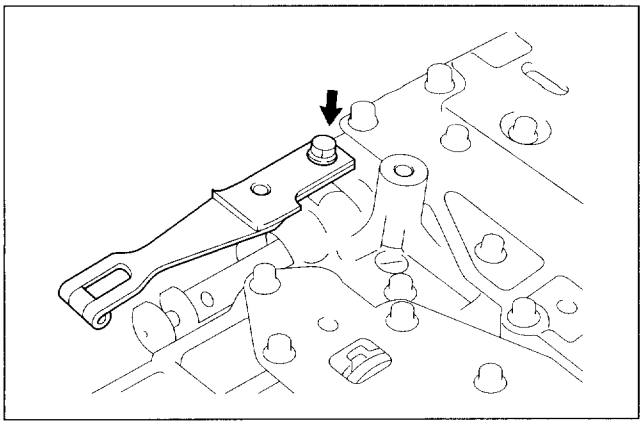

Figure 291. Detent Spring Installation

8. Install manual valve into the valve body.

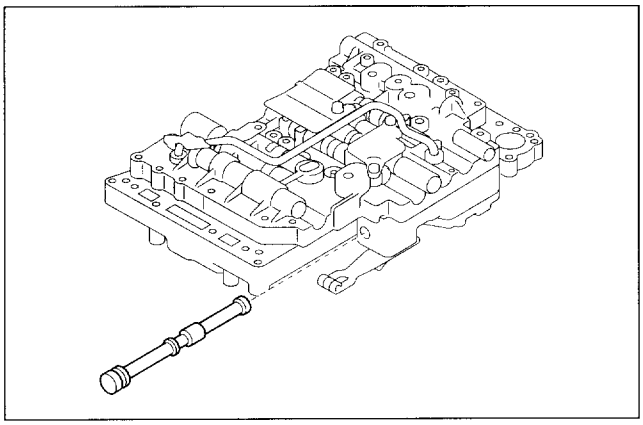

Figure 292. Manual Valve Installation

9. Install the drain tube.
   NOTICE: Use the bolt which is 10.5 mm (0.41 in.) in length.

   Tighten

   Torque: 5.5 N·m (55 kg·cm, 48 lb·in)

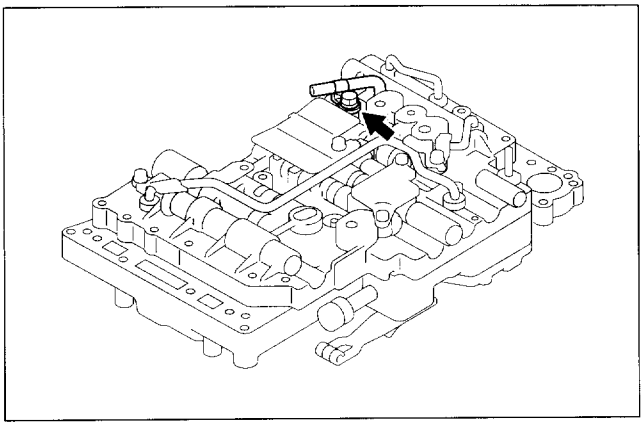

Figure 293. Drain Tube Installation

Upper Valve Body Parts Location

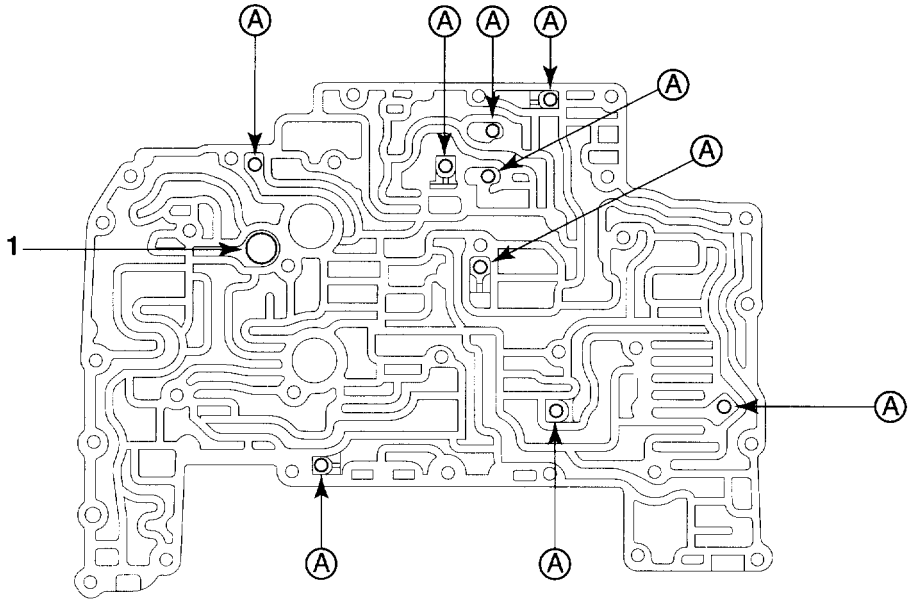

1. Strainer

Figure 294. Check Ball Location

Mark	Name	Diameter mm (in.)
Ⓐ	Check Ball	6.4 (0.252)

Lower Valve Body Parts Location

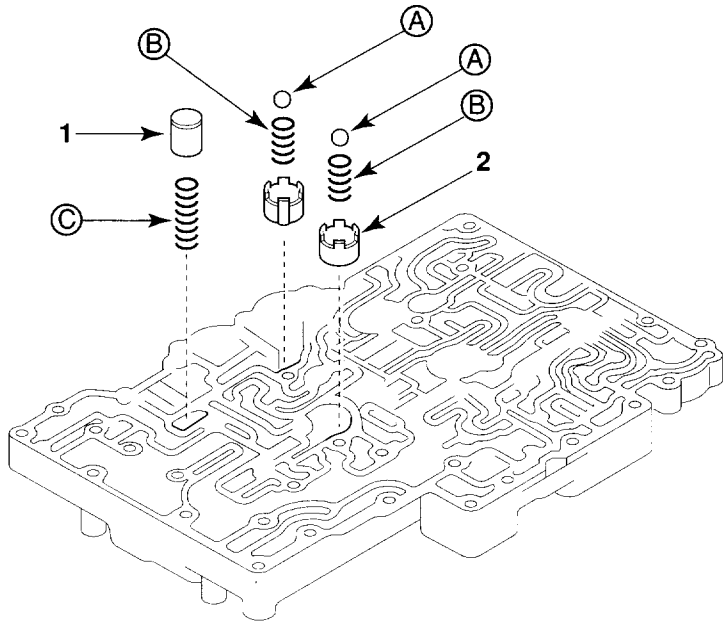

1. Pressure Relief Valve
2. Case

Figure 295. Parts Location

Mark	Name	Diameter mm (in.)
Ⓐ	Check Ball	8.7 (0.343)

Mark	Name (Color)	Free length / Outer Diameter mm (in.)	Total No. of Coils
Ⓑ	Check Ball (Pink)	14.0 / 9.8 (0.551 / 0.386)	8.0
Ⓒ	Pressure Relief Valve (White)	24.0 / 8.2 (0.945 / 0.323)	12.0

EXTENSION HOUSING

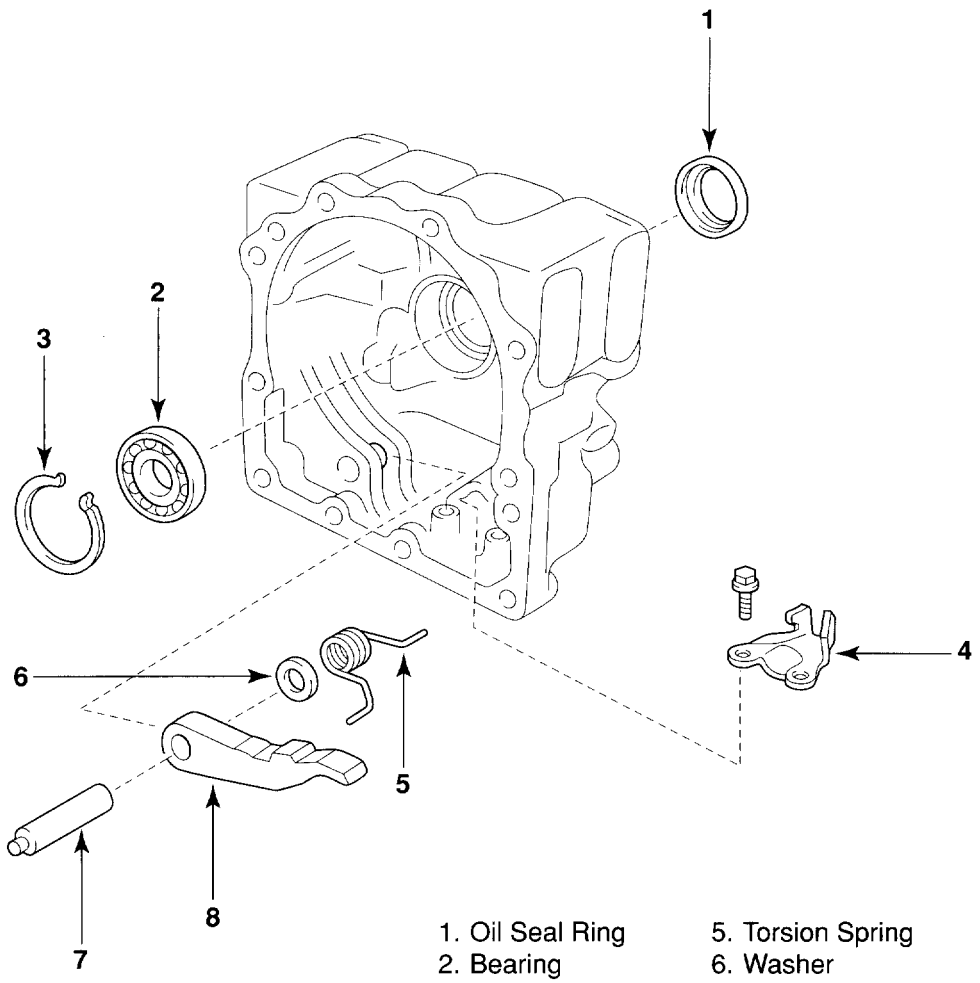

1. Oil Seal Ring
2. Bearing
3. Snap Ring
4. Bracket
5. Torsion Spring
6. Washer
7. Parking Lock Pawl Shaft
8. Parking Lock Pawl

Figure 296. Extension Housing Assembly

Disassemble

1. Remove the parking lock pawl shaft from the extension housing.

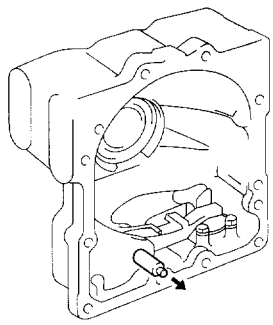

Figure 297. Shaft Removal

2. Remove parking lock pawl, torsion spring and plate washer.
   a) Remove the parking lock pawl.
   b) Remove the spring and plate washer.
   CAUTION: Do not damage the spring and do not deform it unless necessary.

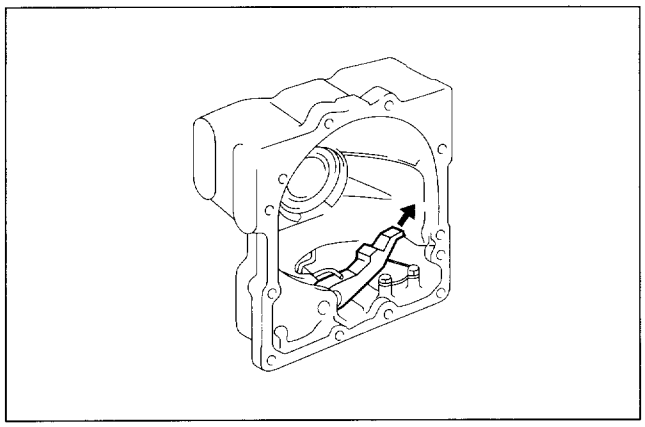

Figure 298. Parking Lock Pawl Removal

3. Remove the 2 bolts and parking lock pawl bracket.

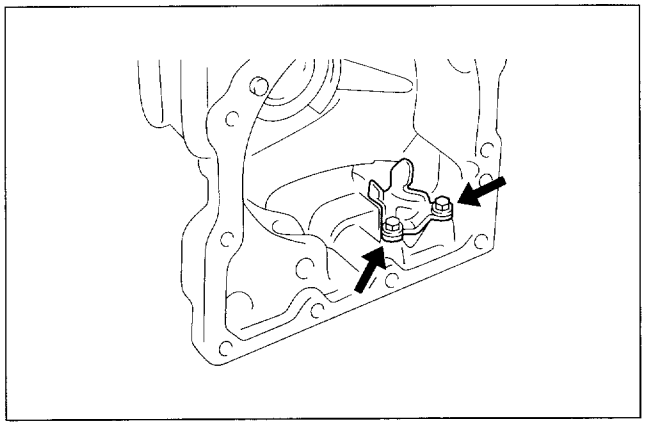

Figure 299. Bracket Removal

4. Using a screwdriver, remove the oil seal.

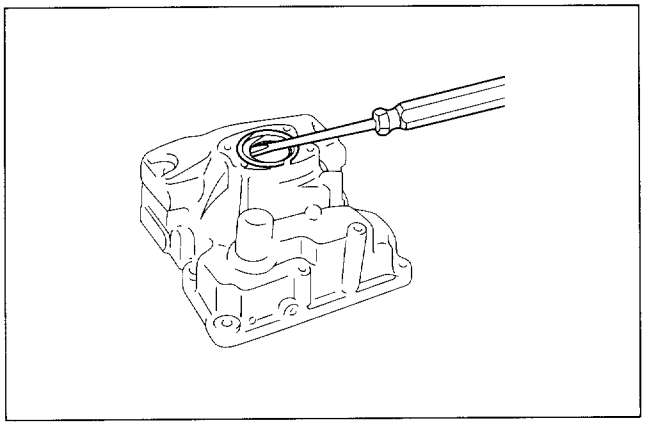

Figure 300. Oil Seal Removal

5. Remove bearing.
   a) Using a screwdriver, remove the snap ring.

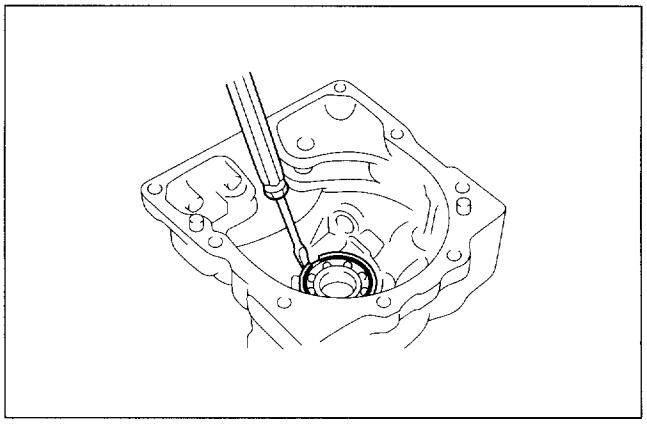

Figure 301. Bearing Removal (1)

   b) Using the rear bearing replacer and a shop press, press out the bearing.

Tool Required:
5-8840-2646-0 Rear Bearing Replacer

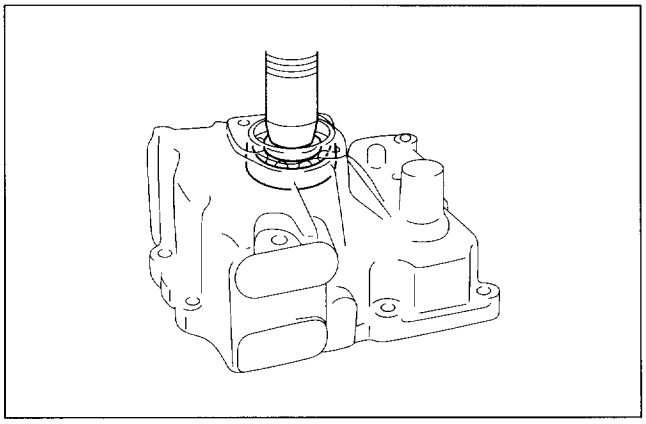

Figure 302. Bearing Removal (2)

Assemble

1. Install bearing.
   a) Using the rear bearing replacer, Oil seal (for lever shaft) installer and a shop press, press in the bearing.
   Tool Required:
   5-8840-2646-0 Rear Bearing Replacer
   5-8840-2653-0 Oil Seal (for lever shaft) Installer

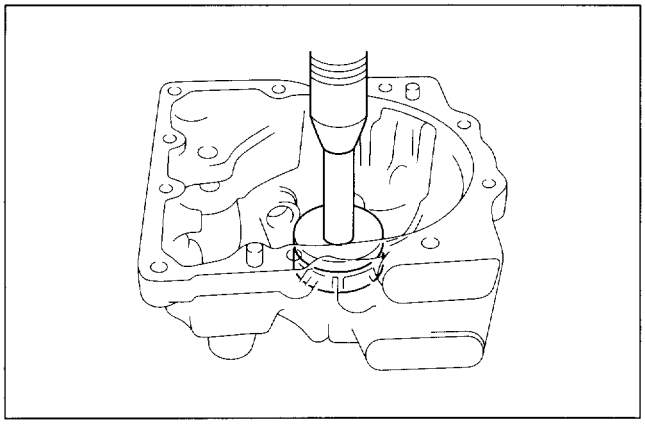

Figure 303. Bearing Installation

   b) Install the snap ring.

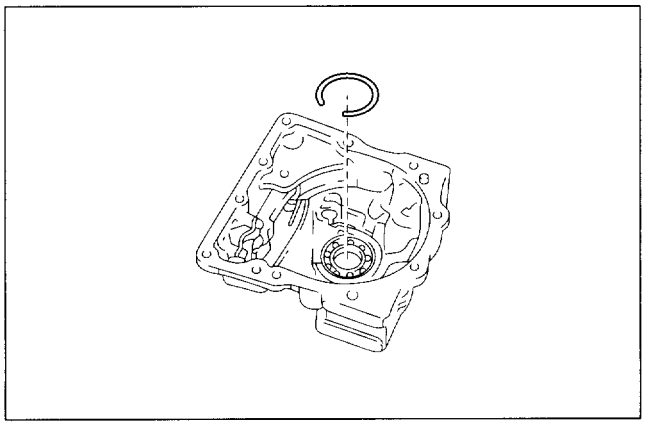

Figure 304. Snap Ring Installation

2. Using the oil seal installer and a hammer, install the oil seal.
   Tool Required:
   5-8840-2644-0 Oil Seal Installer

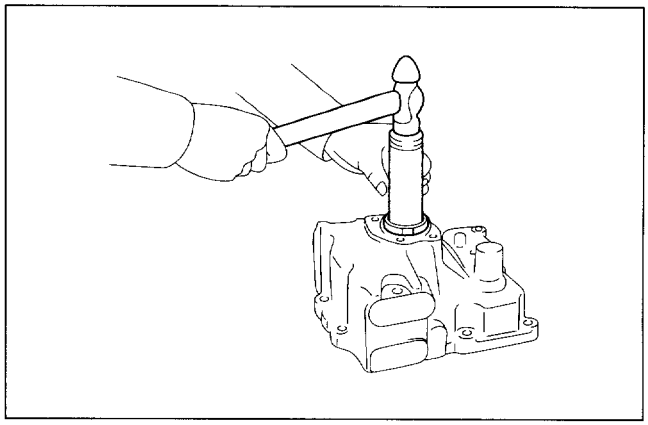

Figure 305. Oil Seal Installation

3. Install parking lock pawl bracket.
   a) Apply sealant (Three Bond 1344 or equivalent) to the threads of the 2 bolts.
   b) Temporarily install the bracket with the 2 bolts.
   NOTICE: These bolts are precoated bolt.

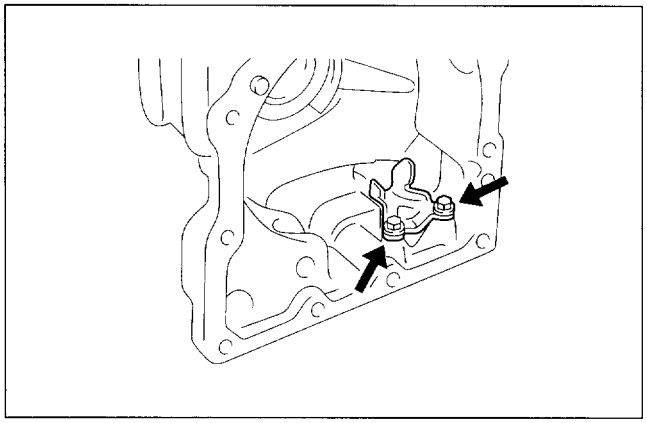

Figure 306. Bracket Installation (1)

   b) Using the plate and a calipers, set the bracket so that the distance between the extension housing surface and the top of the bracket tab is the standard distance.
   Standard distance
   = Total distance – Plate thickness
   Standard distance:
   49.76–49.86 mm (1.959–1.963 in.)
   c) Tighten the 2 bolts.

Tighten

Torque: 19 N·m (1.9 kg·m, 14 lb·ft)

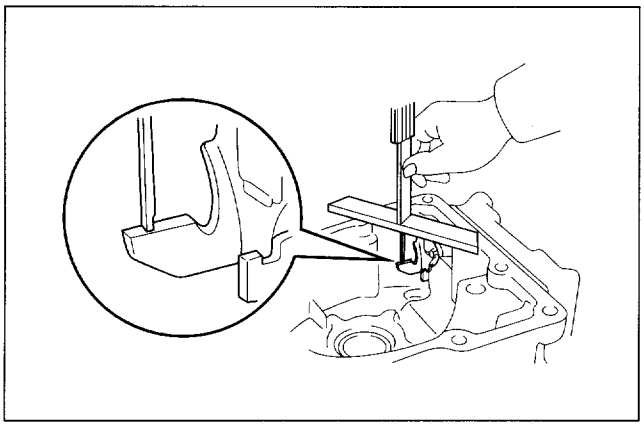

Figure 307. Bracket Installation (2)

4. Install parking lock pawl.
   a) Insert the torsion spring end to the hole of the extension housing.
   b) Install the parking lock pawl, shaft and plate washer.

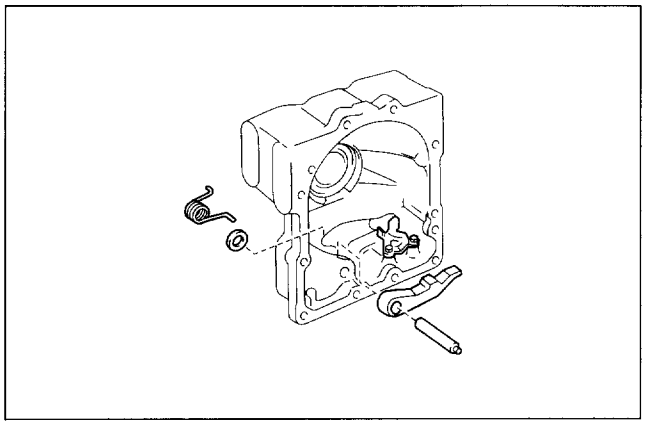

Figure 308. Parking Lock Pawl Installation

   c) Hook another spring end to the parking lock pawl.
   d) Make sure the parking lock pawl moves smoothly.

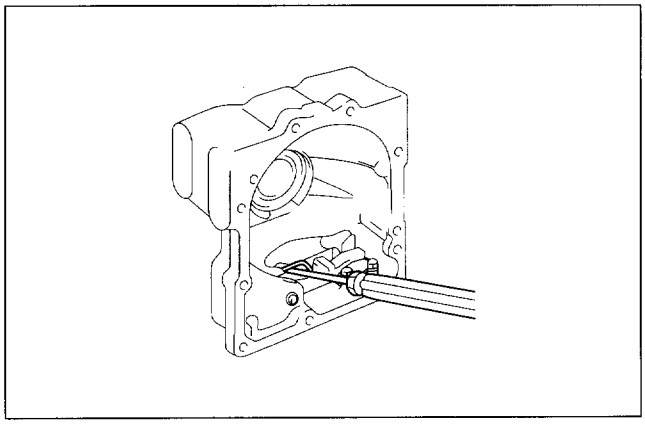

Figure 309. Spring Installation

COMPONENT PARTS INSTALLATION

Disassembly, inspection and assembly of each component group have been indicated in the preceding chapter. Before assembly, make sure again that all component groups are assembled correctly.
If something wrong is found in a certain component group during assembly, inspect and repair this group immediately.
Recommended ATF:
DEXRON®III

General Installation Notes:

1. The automatic transmission is composed of highly precision-finished parts, necessitating careful inspection before assembly because even a small nick could cause fluid leakage and affect performance.
2. Before assembling new clutch discs, soak them in automatic transmission fluid for at least 15 minutes.
   Apply automatic transmission fluid on sliding or rotating surfaces of parts before assembly.
4. Use petroleum jelly to keep small parts in their places.
5. Do not use adhesive cements on gaskets and similar parts.
6. When assembling the transmission, be sure to use new gaskets and O-rings.
7. Dry all parts with compressed air, never use shop rags.

Bearings and Races Location

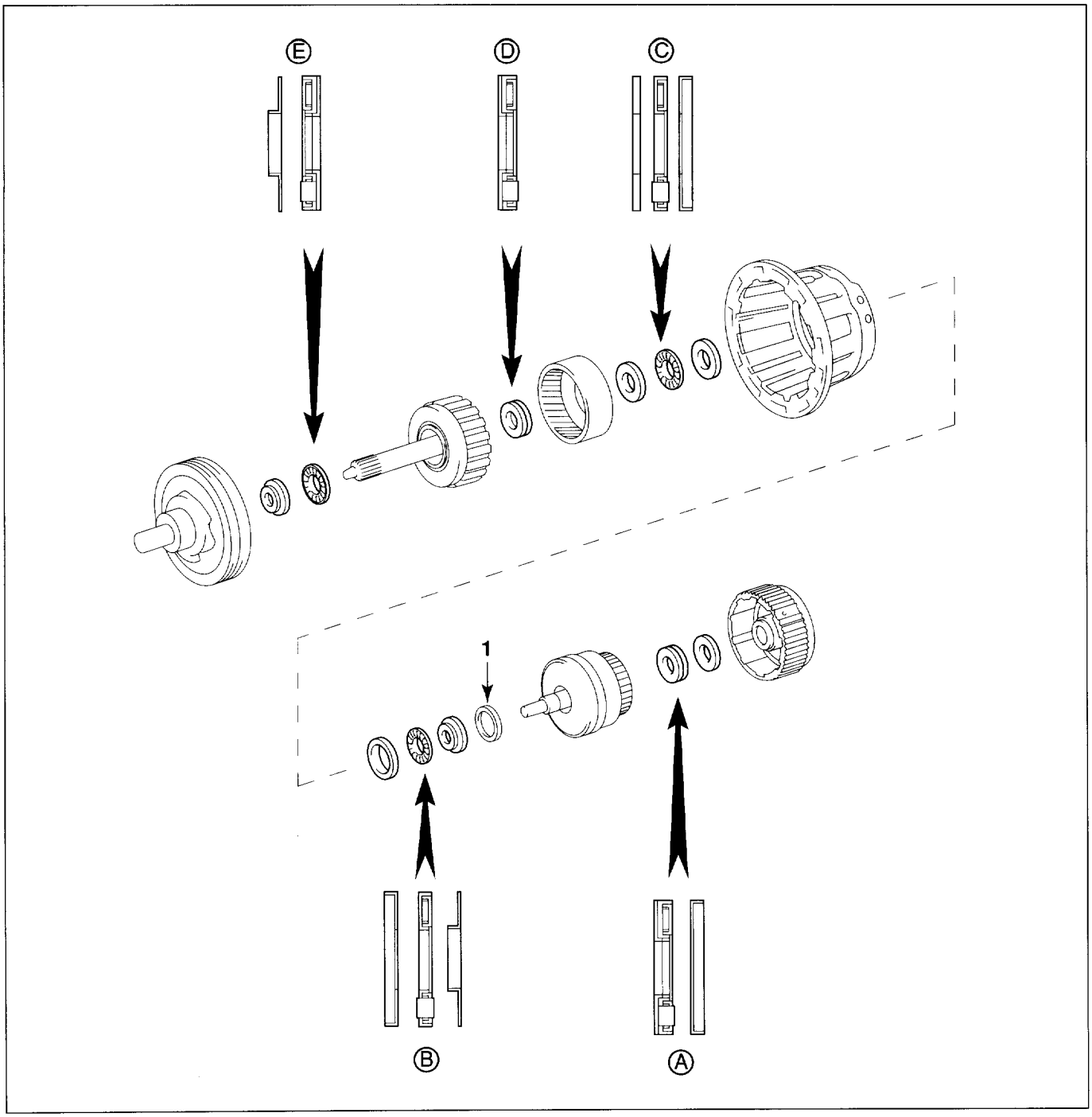

Figure 310. Bearing and Race Location

Mark	Thrust Bearing Diameter Inside/Outside mm (in.)	Front Race Diameter Inside/Outside mm (in.)	Rear Race Diameter Inside/Outside mm (in.)
Ⓐ	32.8 / 52.0 (1.291 / 2.047)	–	37.0 / 52.0 (1.457 / 2.047)
Ⓑ	34.7 / 52.0 (1.366 / 2.047)	37.0 / 52.0 (1.457 / 2.047)	32.8 / 50.4 (1.291 / 1.984)
Ⓒ	34.7 / 58.4 (1.366 / 2.299)	34.6 / 58.2 (1.362 / 2.291)	37.0 / 60.5 (1.457 / 2.382)
Ⓓ	23.2 / 42.0 (0.913 / 1.654)	–	–
Ⓔ	28.5 / 48.0 (1.122 / 1.819)	27.1 / 43.0 (1.067 / 1.693) 27.9 / 43.0 (1.098 / 1.693) 28.3 / 43.0 (1.114 / 1.693)	–

Install or Connect

Manual Valve Lever, Shaft and Oil Seals

1. Using the oil seal installer, tap in new 2 oil seals.
   Tool Required:
   5-8840-2653-0 Lever Shaft Oil Seal Installer
2. Apply multi purpose grease to the oil seal lip.

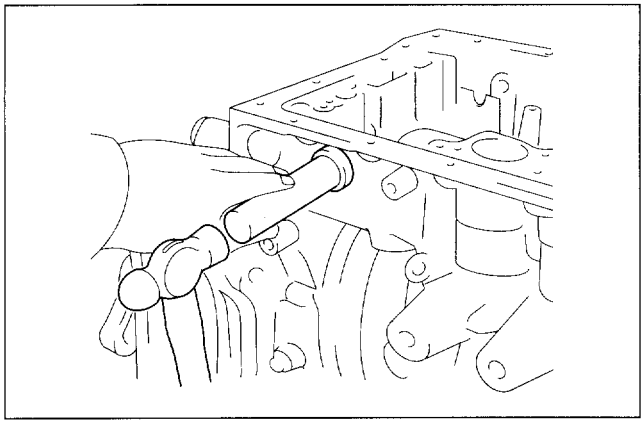

Figure 311. Oil Seal Installation

3. Install the new spacer to the manual valve lever.

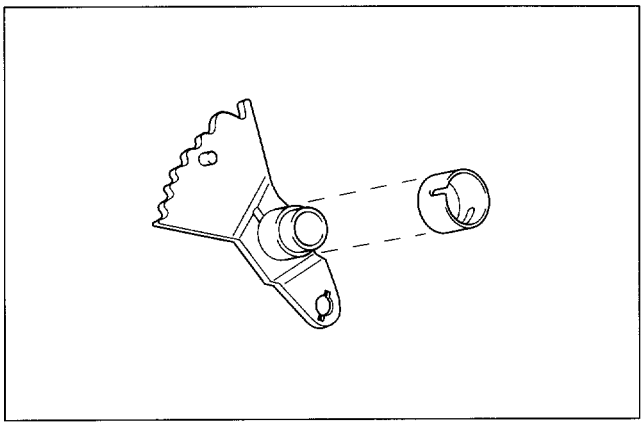

Figure 312. Spacer Installation

4. Connect the parking lock rod to the manual valve lever.

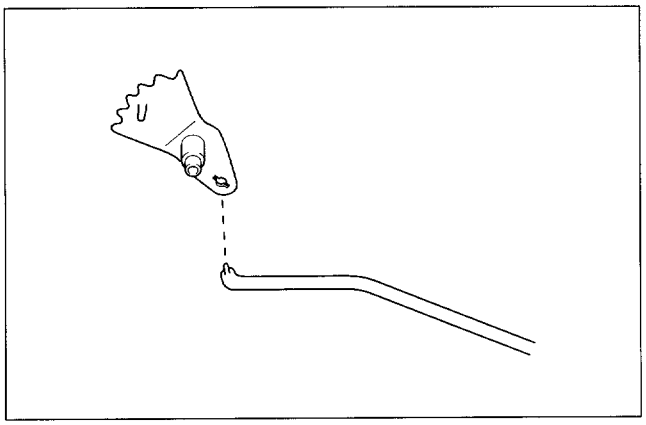

Figure 313. Manual Valve Lever Installation

5. Install the manual valve lever shaft to the transmission case through the manual valve lever.
   CAUTION: Be careful not to damage the oil seals.

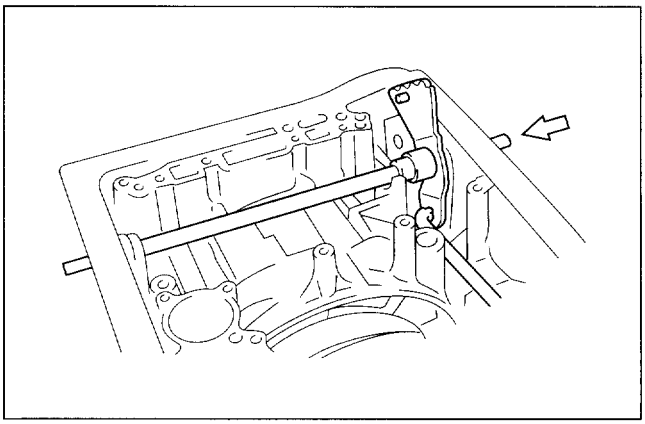

Figure 314. Lever Shaft Installation

6. Using a punch and hammer, tap in the pin with the slot at right angle to the shaft.

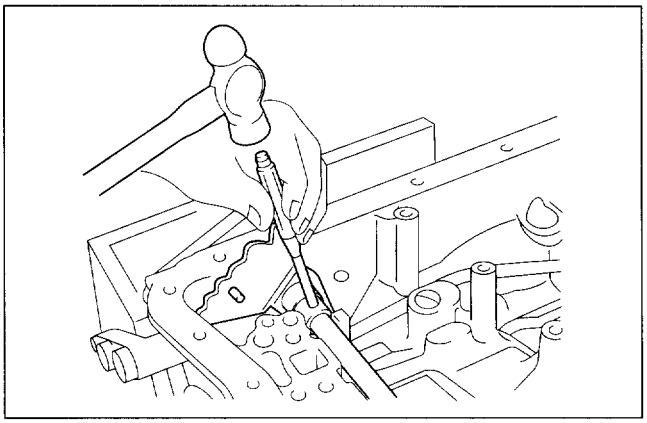

Figure 315. Pin Installation

7. Match the spacer hole to the lever calking hollow and calk the spacer to the lever.
8. Make sure the manual valve lever shaft turns smoothly.

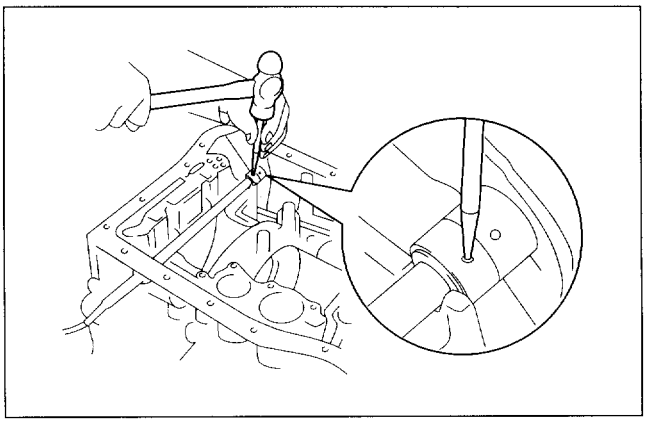

Figure 316. Spacer Calking

Planetary Gears, One-Way Clutch and Output Shaft Assembly

1. Place the transmission case on a cylinder.
2. Install the rear planetary gear and output shaft assembly to the transmission case.

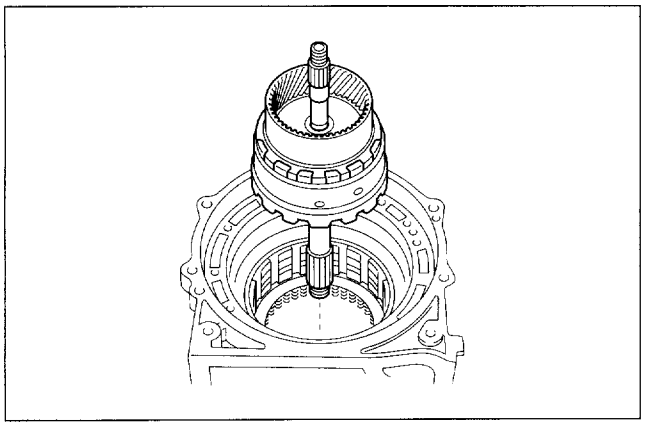

Figure 317. Output Shaft Assembly Installation

3. Temporarily install 2 bolts to the front planetary gear.
   NOTICE: Use two 6 mm (1 mm pitch) bolts. Do not screw more than 5 revolutions.
4. Align the spline of the one-way clutch assembly into the transmission case.
5. Install the front planetary gear and one-way clutch assembly into the transmission case.
   NOTICE:
   - **Mesh the spline of the front planetary gear with the flukes of the discs by rotating and pushing the front planetary gear clockwise.**
   - **If the front planetary gear will not rotate clockwise, check the installation of the one-way clutch.**

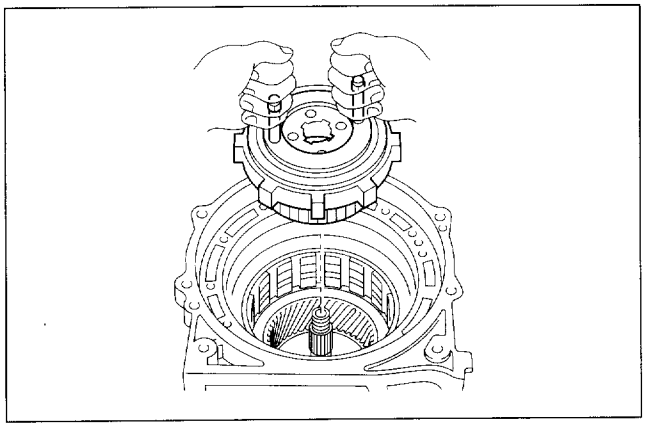

Figure 318. Front Planetary Gear Assembly Installation

6. Remove the 2 bolts from the front planetary gear.
7. Using a screwdriver, install the snap ring.
   NOTICE: Be sure the end of the snap ring is not aligned with the cutout portion of the transmission case.

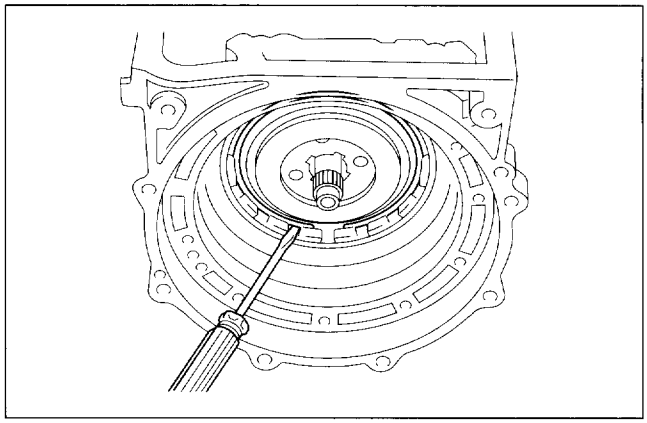

Figure 319. Snap Ring Installation

8. Coat the thrust washer with petroleum jelly, and install it onto the front planetary gear.
   NOTICE: Securely fit the claws of the thrust washer into the grooves of the front planetary gear.

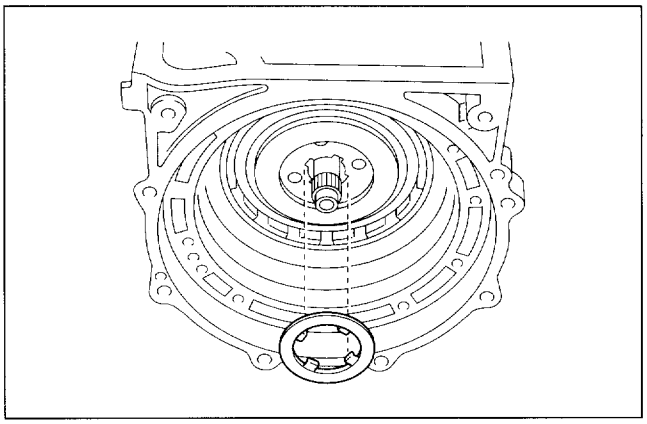

Figure 320. Thrust Washer Installation

Temporarily Install Center Support Assembly

1. Coat the thrust washer with petroleum jelly, and install it onto the rear side of the center support.
   NOTICE: Securely fit the claws of the thrust washer into the grooves of the center support.

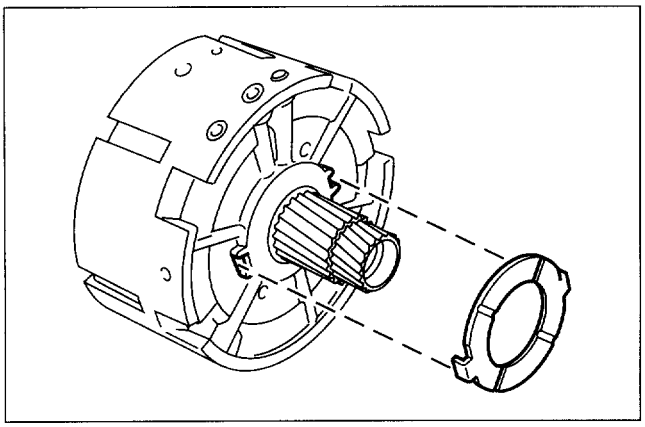

Figure 321. Thrust Washer Installation

2. Install oil pump remover (2 bolts) to the center support.
   Tool Required:
   5-8840-2652-0 Oil Pump Remover
3. Align the oil holes and bolt holes of the center support and transmission case.
4. Install the center support assembly into the transmission case.

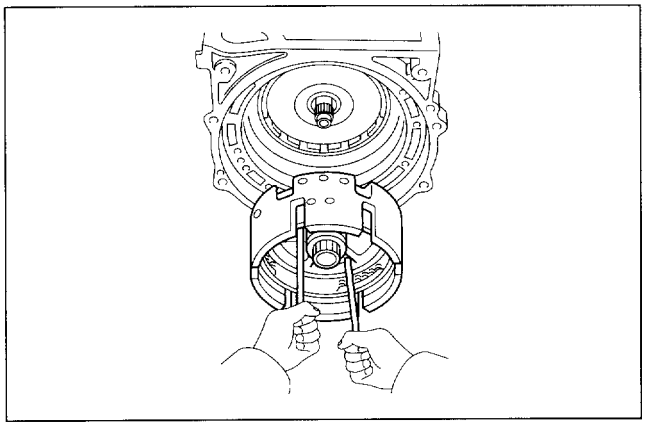

Figure 322. Center Support Installation

5. Install the 3 center support bolts.

Tighten

Torque: 25 N·m (2.5 kg·m, 18 lb·ft)

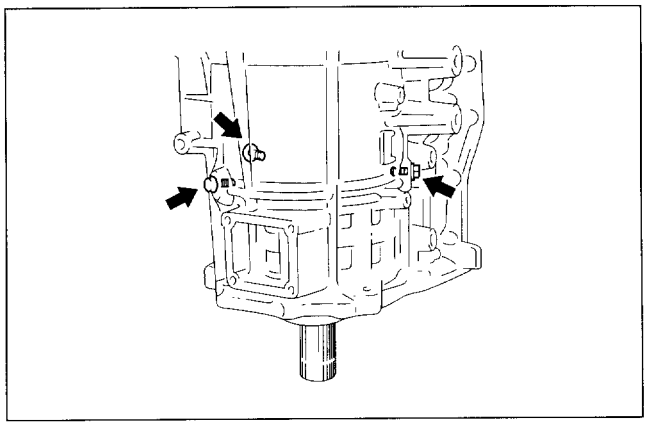

Figure 323. Center Support Bolt

Parking Lock Gear

Install the parking lock gear onto the output shaft.

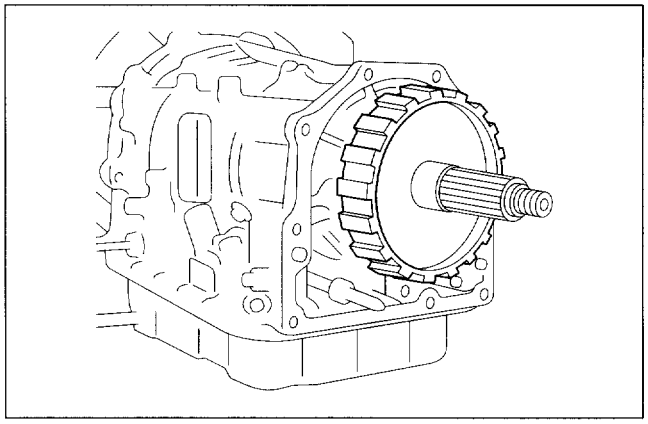

Figure 324. Parking Lock Gear Installation

Output Shaft Spacer and Speedometer Drive Gear

Install the spacer and speedometer drive gear onto the output shaft.

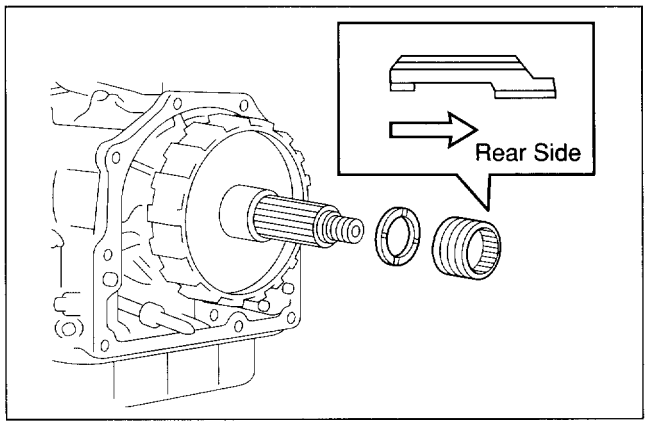

Figure 325. Speedometer Drive Gear Installation

Extension Housing

1. Place the new gasket on the transmission case.
2. Install the parking lock rod between the parking lock pawl and bracket, and attach the extension housing on the transmission case.

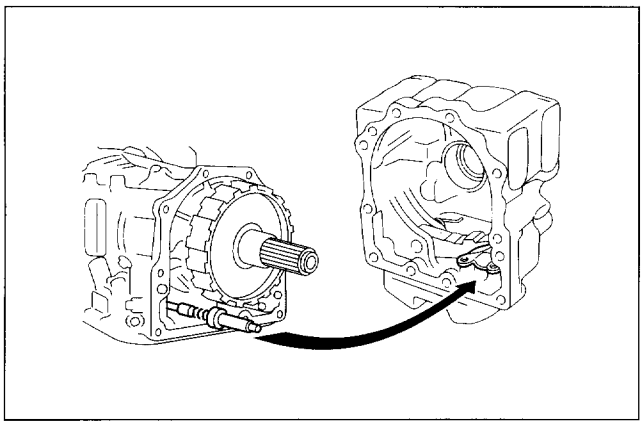

Figure 326. Extension Housing Installation

3. Apply sealant (Three Bond 1344, Loctite 572 or equivalent) to the thread of the 2 bolts.
4. Install the 2 bolts indicated by ☆ marks in the illustration and tighten them.
5. Install and tighten the 7 bolts.
   Bolt length:
   A 45 mm (1.77 in.)
   B 50 mm (1.97 in.)
   C 85 mm (3.35 in.)
   D 117 mm (4.61 in.)
   E 120 mm (4.72 in.)

Tighten

Torque: 37 N·m (3.8 kg·m, 27 lb·ft)

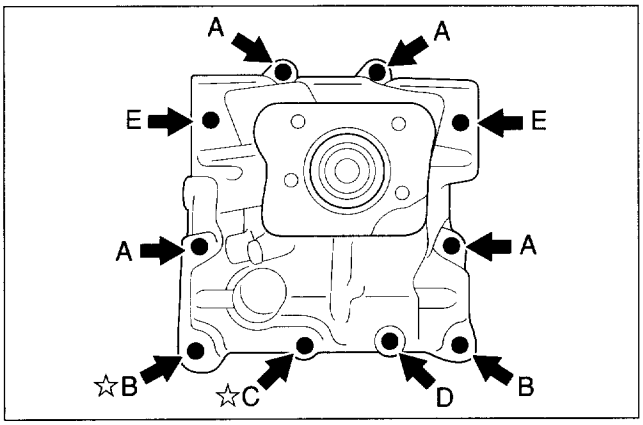

Figure 327. Extension Housing Bolts

Thrust Clearance of Center Support

1. Push the transmission output shaft toward the front of the transmission by applying a force of 49–89 N (5–10 kg, 11.0–22.0 lb).
2. Push the center support toward the rear of the transmission by applying a force of 49–89 N (5–10 kg, 11.0–22.0 lb), then pull with the same amount of force.

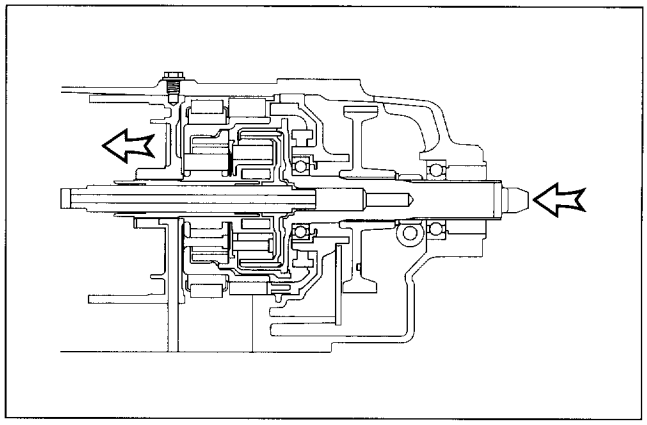

Figure 328. Thrust Clearance Adjustment (1)

3. Place the plate on the center support.
   Tool Required:
   5-8840-2647-0 Plate
4. Using calipers, measure distance (A) between the tops of the plate and the thrust washer on the front planetary gear.
5. Using calipers, measure thickness (B) of the plate.

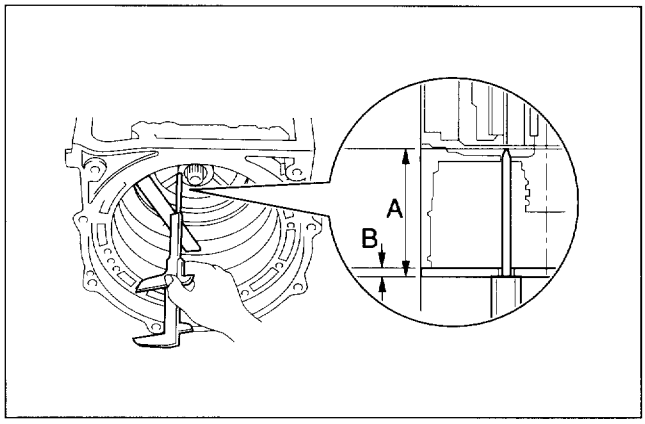

Figure 329. Thrust Clearance Adjustment (2)

6. Remove the 3 center support set bolts.

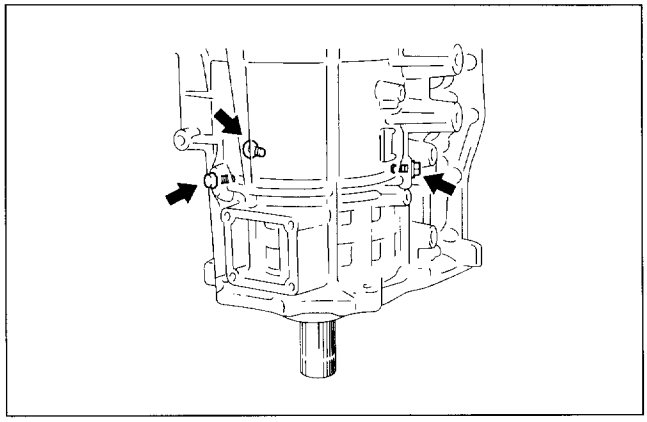

Figure 330. Thrust Clearance Adjustment (3)

7. Using the oil pump remover, remove the center support assembly from transmission case.
   Tool Required:
   5-8840-2652-0 Oil Pump Remover

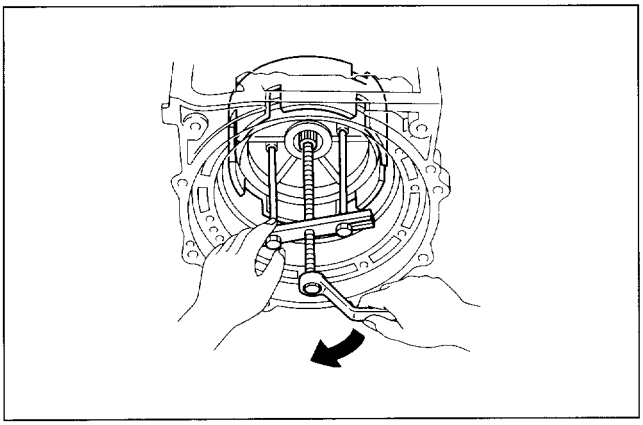

Figure 331. Thrust Clearance Adjustment (4)

8. Turn over the center support together with the thrust washer, and place it on a flat surface.
9. Inserting calipers into the thrust washer hole, measure the distance (C) between it and the flat surface.
   Center support thrust clearance: A – (B + C)
   Standard thrust clearance: 0.30–0.70 mm (0.0118–0.0276 in.)
   Maximum thrust clearance: 0.90 mm (0.0354 in.)

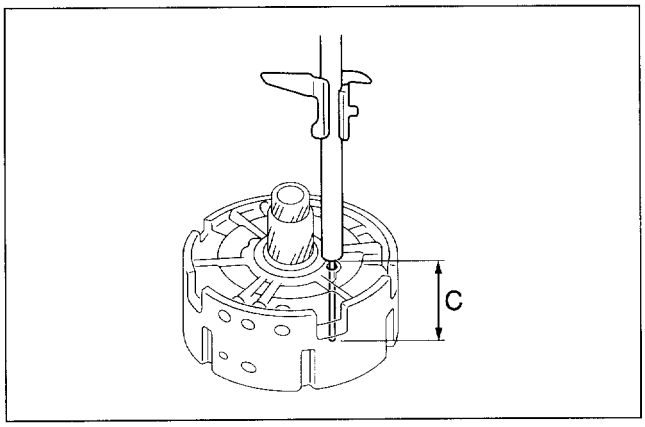

Figure 332. Thrust Clearance Adjustment (5)

If the thrust clearance is greater than the maximum, select and install a thrust washer.

Thrust washer thicknesses

Thickness mm (in.)	
1.5 (0.059)	1.8 (0.071)
2.1 (0.083)	2.4 (0.094)
2.7 (0.108)	

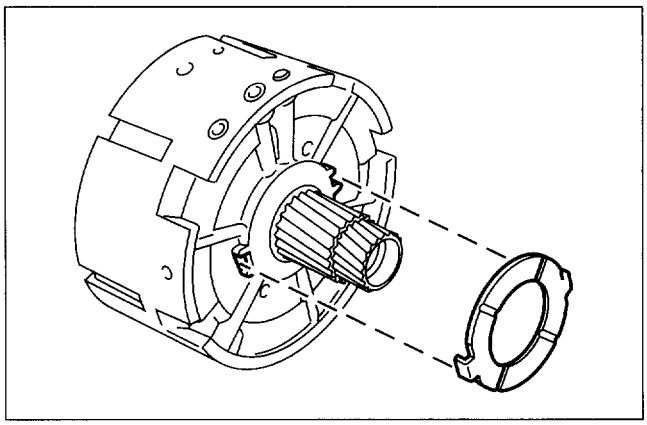

Figure 333. Thrust Clearance Adjustment (6)

Center Support Assembly Installation

1. Coat new 3 O-rings with ATF and install them to the oil holes of the center support.

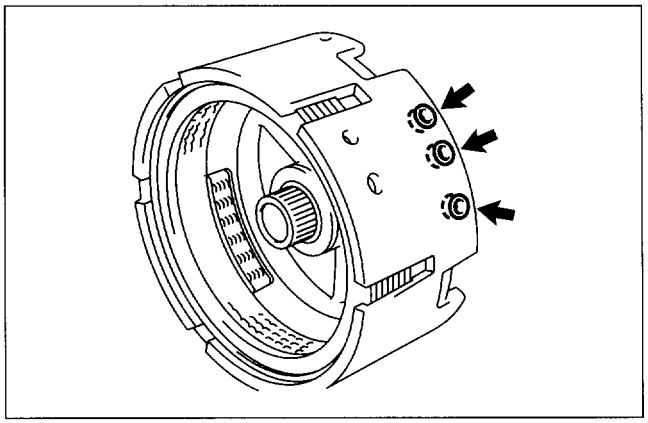

Figure 334. O-ring Installation

2. Install the oil pump remover (2 bolts) to the center support.
   Tool Required:
   5-8840-2652-0 Oil Pump Remover
3. Align the oil holes and bolt hole of the center support and transmission case.
4. Install the center support assembly into the transmission case.

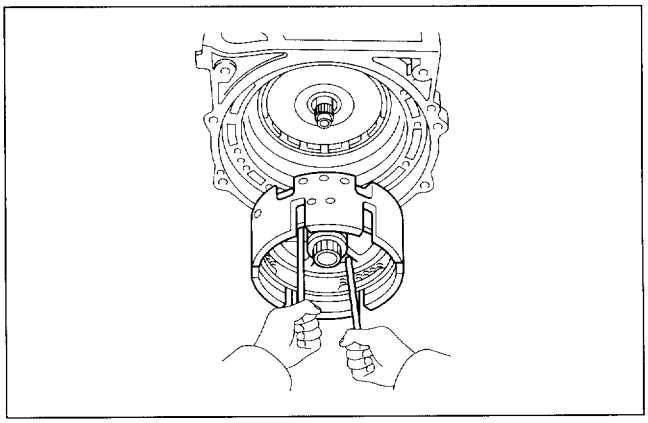

Figure 335. Center Support Installation

5. Apply sealant (Three Bond 1344, Loctite 572 or equivalent) to the threads of the center support set bolts.

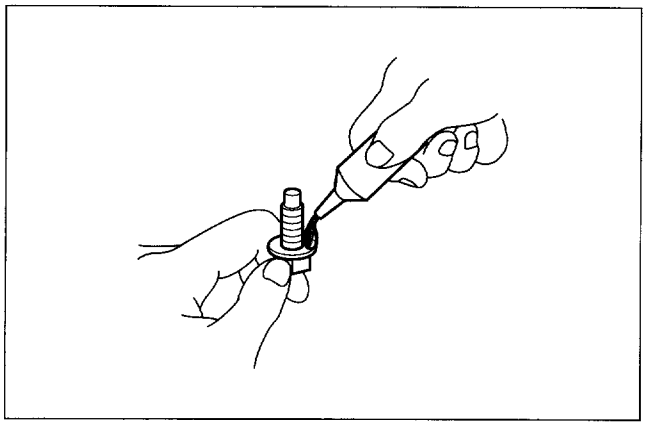

Figure 336. Sealant

6. Install the 3 center support set bolts.

Tighten

Torque: 25 N·m (2.6 kg·m, 19 lb·ft)

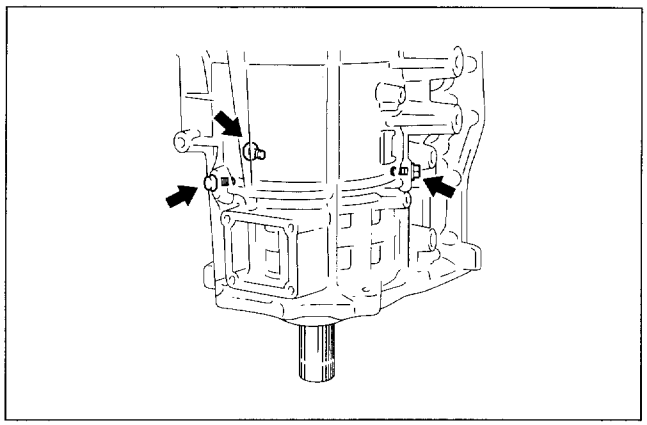

Figure 337. Center Support Bolt

Rear Clutch Assembly

Install the rear clutch assembly into the transmission case.

NOTICE: Mesh the spline of the rear clutch drum with the flukes of the discs by rotating and pushing the rear clutch drum clockwise or counterclockwise.

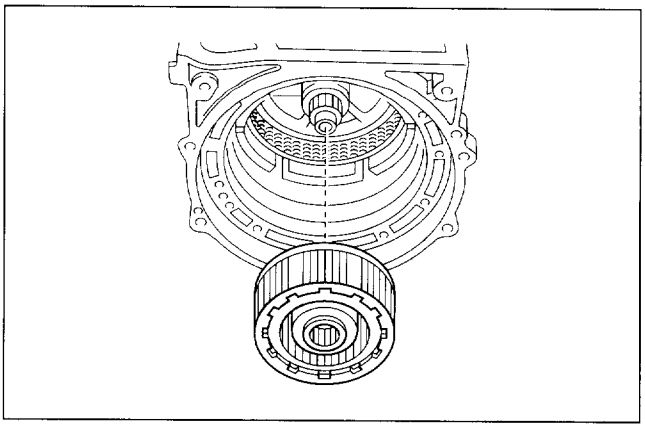

Figure 338. Rear Clutch Assembly Installation

Front Clutch Assembly

1. Coat the race with petroleum jelly, and install it onto the rear clutch drum.

Race diameter

Diameter mm (in.)	Inside	Outside
Race	37.0 (1.457)	52.0 (2.047)

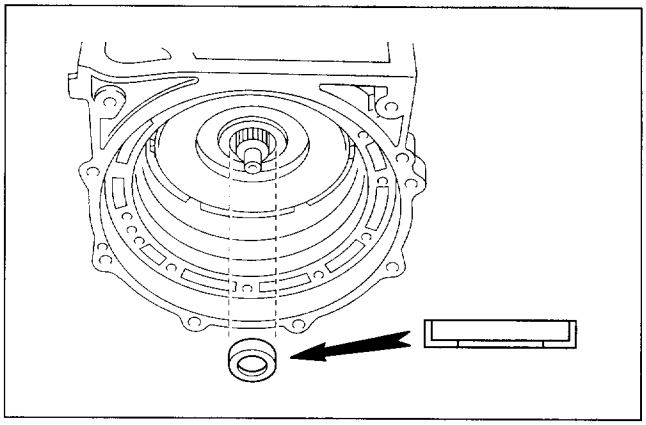

Figure 339. Race Installation

2. Coat the bearing with petroleum jelly, and install it onto the front clutch hub.

Bearing diameter

Diameter mm (in.)	Inside	Outside
Bearing	32.8 (1.291)	52.0 (2.047)

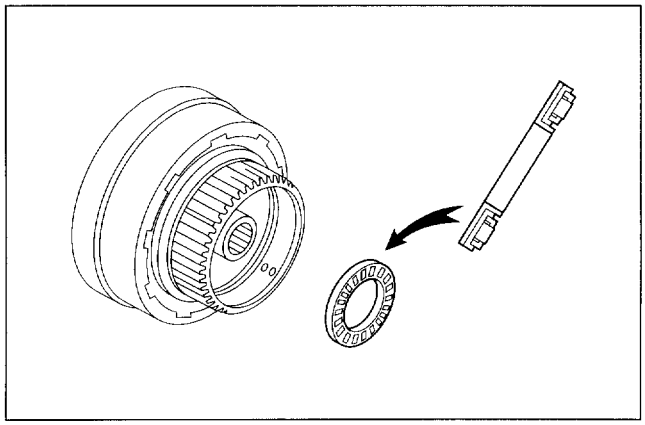

Figure 340. Bearing Installation

3. Coat the spacer, race and bearing with petroleum jelly, and install the spacer and them onto the front clutch drum.
   Bearing and race diameter

Diameter mm (in.)	Inside	Outside
Bearing	34.7 (1.366)	52.0 (2.047)
Race (Rear)	32.8 (1.291)	50.4 (1.984)

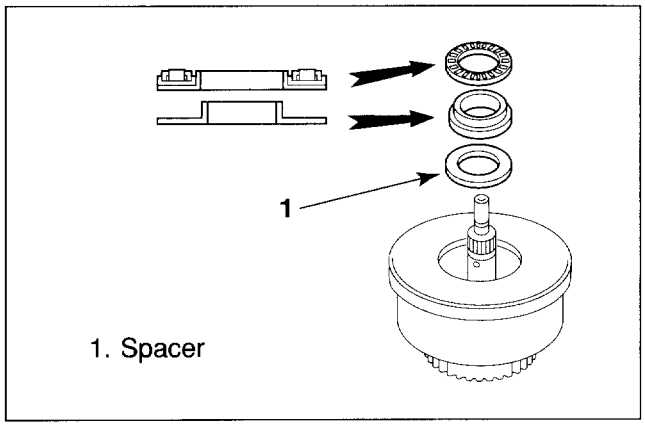

Figure 341. Bearing and Race Installation

4. Coat the new oil seal ring with ATF.
5. Install the oil seal ring to the clutch drum, then sank it down by squeezing their ends together.
   CAUTION: Do not spread the ring seals more than necessary.

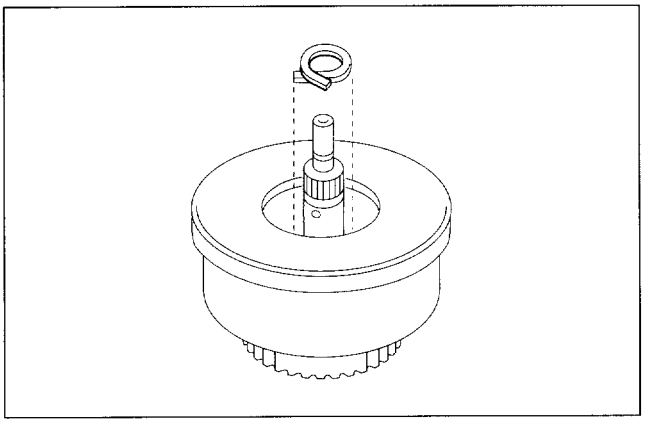

Figure 342. Oil Seal Ring Installation

6. Install the front clutch assembly into the rear clutch assembly.
   NOTICE: Mesh the spline of the front clutch hub with the flukes of the discs by rotating and pushing the front clutch drum clockwise or counterclockwise.

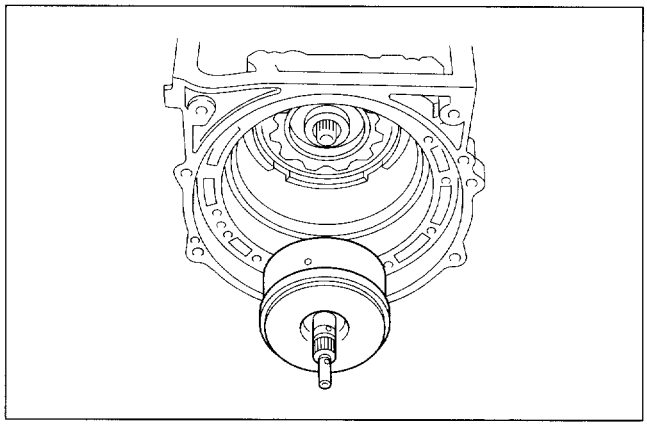

Figure 343. Front Clutch Assembly Installation

7. Place the plate on the installation surface of the oil pump.
   Tool Required:
   5-8840-2647-0 Plate
8. Using calipers, measure the distance between the tops of the plate and the clutch drum.
   If the distance corresponds to that during disassembly, the front clutch assembly is installed correctly.

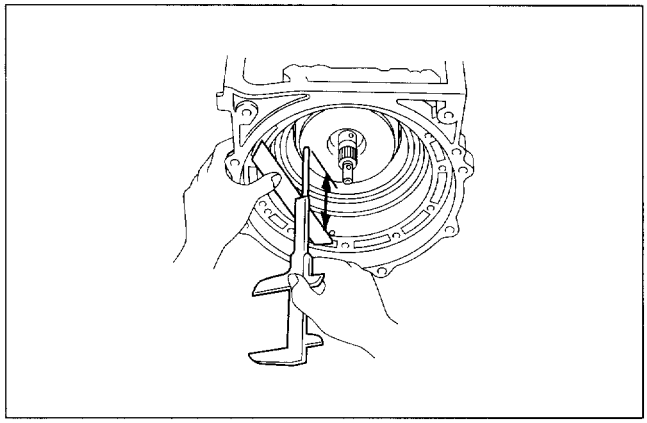

Figure 344. Correct Installation Check

Temporarily Install Overdrive Case Assembly

1. Coat the race with petroleum jelly, and install it into the O/D case.
   Race diameter

Diameter mm (in.)	Inside	Outside
Race (Rear)	32.8 (1.291)	50.4 (1.984)

2. Install the oil pump remover (2 bolts) to the O/D case.
3. Align the oil holes and bolt holes of the O/D case and transmission case.

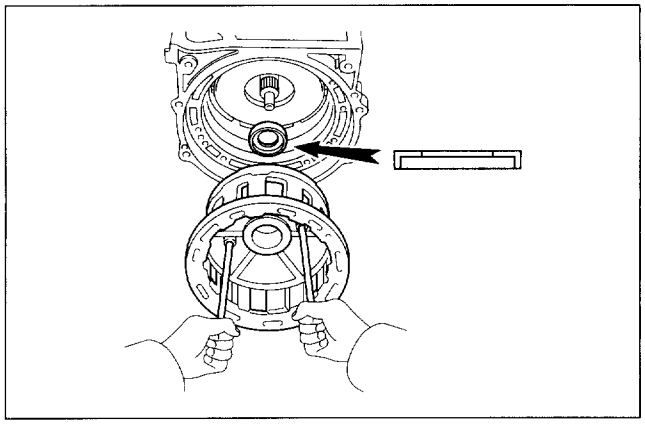

Figure 345. O/D Case Assembly Installation

3. Temporarily install the 3 bolts.

Tighten

Torque: 25 N·m (2.5 kg·m, 18 lb·ft)

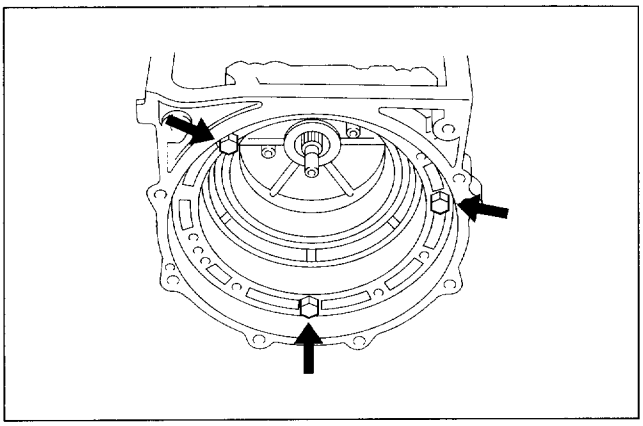

Figure 346. O/D Case Bolt

Thrust Clearance of Input Shaft (Front Clutch Drum)

1. Push the transmission output shaft toward the front of the transmission by applying a force of 49–98 N (5–10 kg, 11.0–22.0 lb).
2. Push the O/D case toward the rear of the transmission by applying a force of 49–98 N (5–10 kg, 11.0–22.0 lb).

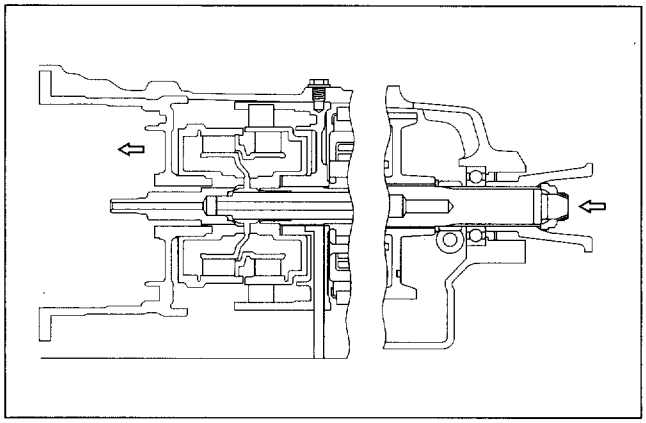

Figure 347. Thrust Clearance Adjustment (1)

3. Using the extension bar and a dial indicator, measure the thrust clearance of the input shaft.
   Tool Required:
   5-8840-2651-0 Extension Bar
   Standard thrust clearance: 0.30–0.70 mm (0.0118–0.0276 in.)
   Maximum thrust clearance: 0.70 mm (0.0276 in.)
   If the thrust clearance is greater than the maximum, adjust with a spacer.

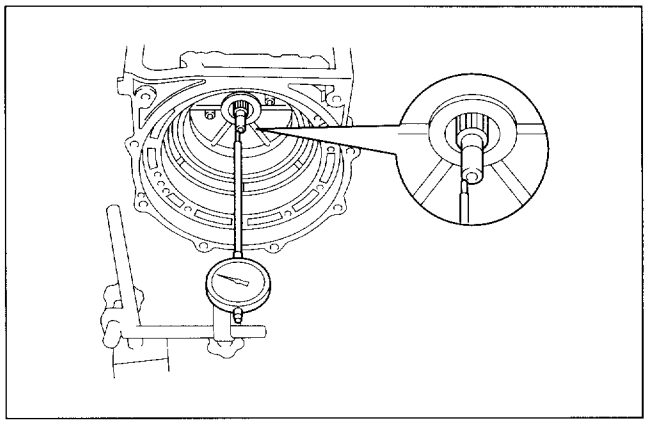

Figure 348. Thrust Clearance Adjustment (2)

4. Remove the 3 O/D case set bolts.

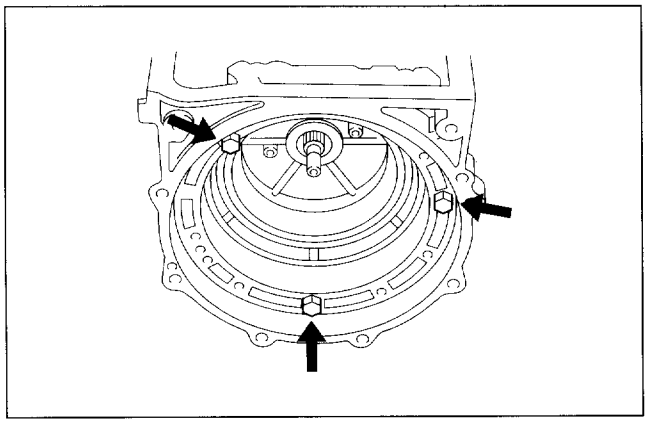

Figure 349. O/D Case Bolt

5. Using the oil pump remover, remove the O/D case assembly.
   Tool Required:
   5-8840-2652-0 Oil Pump Remover

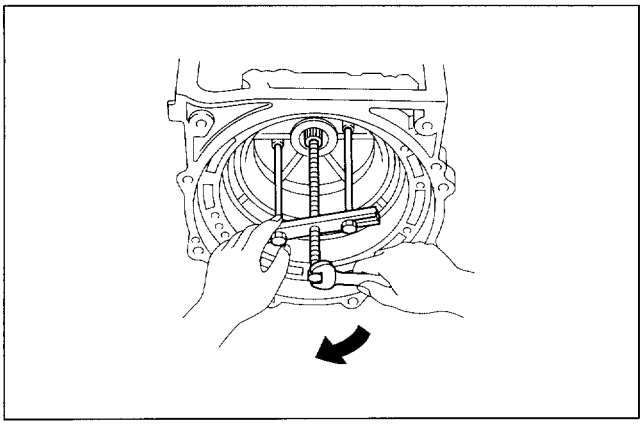

Figure 350. O/D Case Removal

6. Remove the thrust bearing, two races, and spacer from the front clutch drum or O/D case.
7. Select a spacer.

Spacer thicknesses

Thickness mm (in.)	
0.9 (0.035)	1.8 (0.071)
1.2 (0.047)	2.1 (0.083)
1.5 (0.059)	

8. Install the spacer, 2 races and bearing onto the front clutch drum.

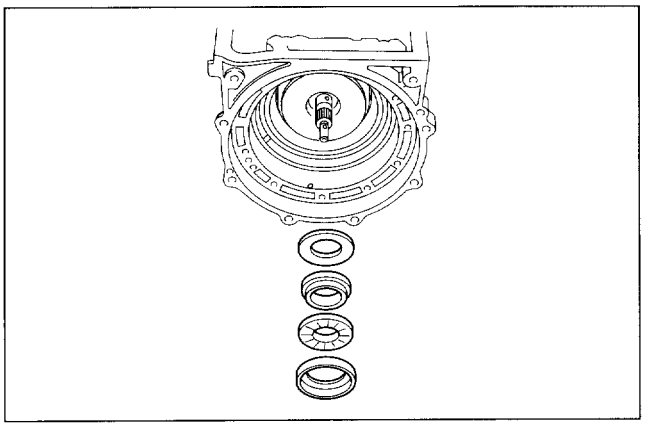

Figure 351. Race, Bearing and Spacer Installation

Overdrive Case Assembly Installation

1. Coat the new 3 O-rings with ATF, and install them to the oil holes of the O/D case.

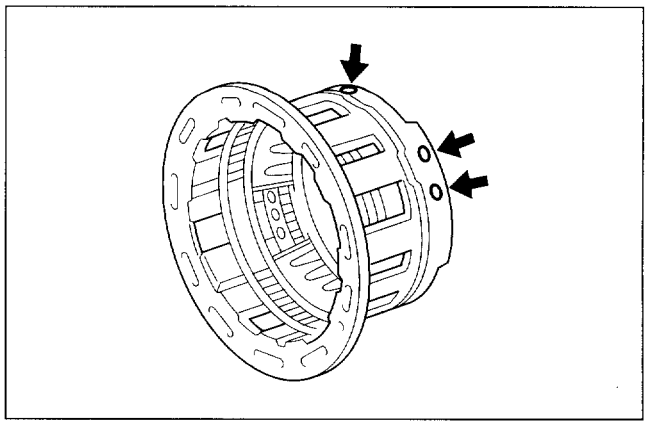

Figure 352. O-ring Installation

2. Install the oil pump remover (2 bolts) to the O/D case.
   Tool Required:
   5-8840-2652-0 Oil Pump Remover
3. Align the oil holes and bolt holes of the O/D case and transmission case.

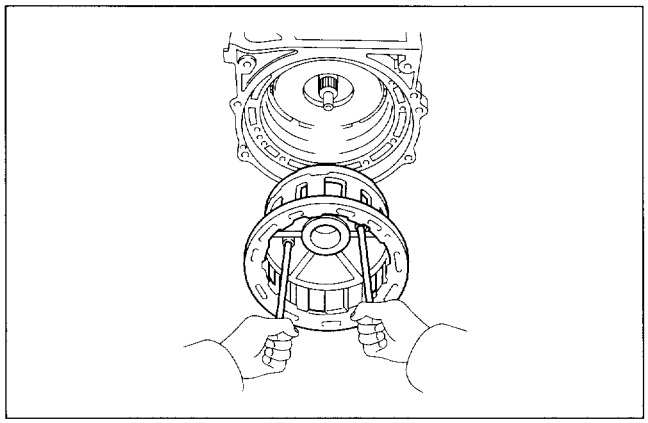

Figure 353. O/D Case Installation

Overdrive Ring Gear Assembly

1. Coat the race and bearing with petroleum jelly, and install them onto the O/D case.
   Race and bearing diameter

Diameter mm (in.)	Inside	Outside
Race	37.0 (1.457)	60.5 (2.382)
Bearing	34.7 (1.366)	58.4 (2.299)

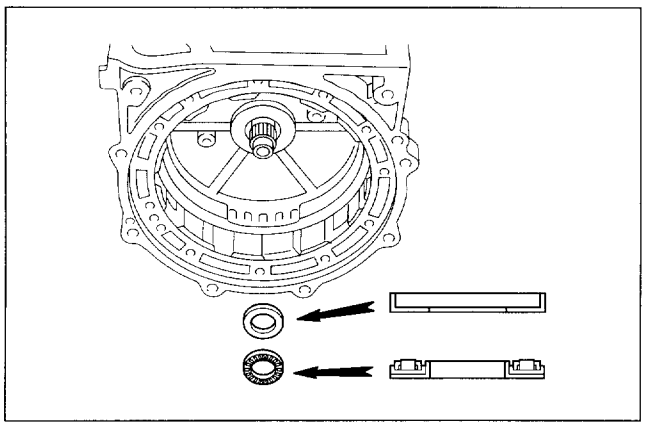

Figure 354. Race and Bearing Installation

2. Coat the race with petroleum jelly, and install it onto the ring gear flange.
   Race diameter

Diameter mm (in.)	Inside	Outside
Race	34.6 (1.362)	58.2 (2.291)

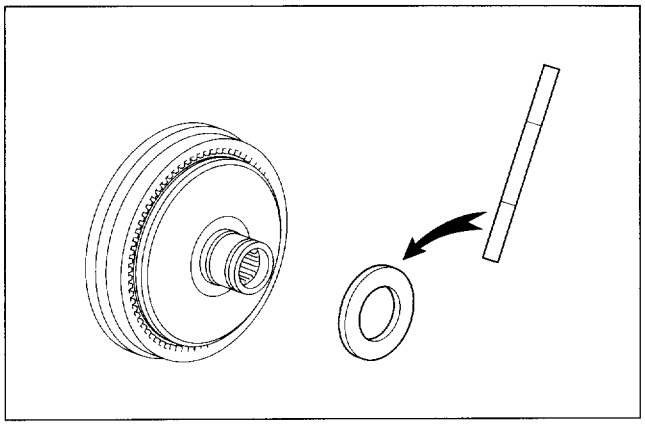

Figure 355. Race Installation

3. Install the ring gear assembly into the O/D case.

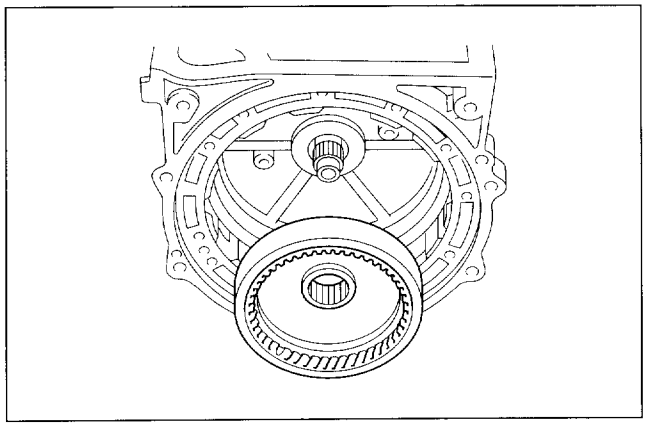

Figure 356. Ring Gear Assembly Installation

Overdrive Planetary Gear, Overdrive Direct Clutch and One-Way Clutch Assembly

1. Coat the 2 bearings with petroleum jelly, and install them onto the planetary gear.
   Bearing diameters

Diameter mm (in.)	Inside	Outside
Bearing (A)	28.5 (1.122)	48.0 (1.889)
Bearing (B)	23.2 (0.913)	42.0 (1.654)

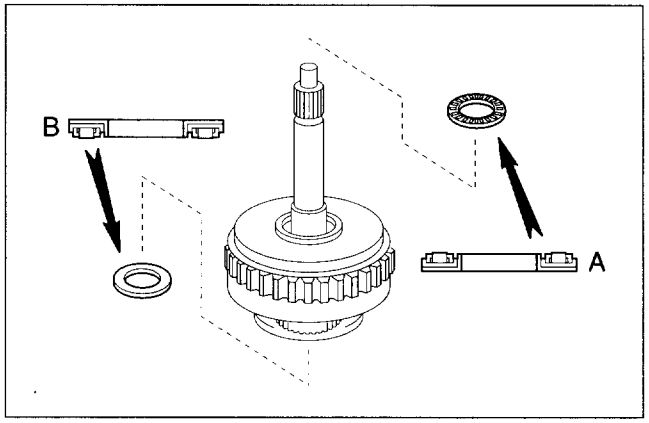

Figure 357. Bearing Installation

2. Install the planetery gear, direct clutch and one-way clutch assembly into transmission case.
   NOTICE: Mesh the spline of the O/D direct clutch drum with the flukes of the discs by rotating and pushing the O/D direct clutch drum clockwise or counterclockwise.

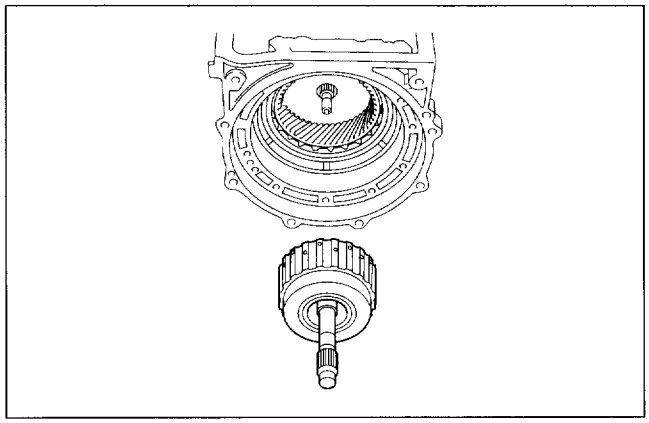

Figure 358. O/D Direct Clutch Assembly Installation

3. Place the plate on the installtion surface of the oil pump.
   Tool Required:
   5-8840-2647-0 Plate
4. Using calipers, measure the distance between the tops of the plate and the clutch drum.
   If the distance corresponds to that during disassembly, the O/D planetary gear, O/D direct clutch and one-way clutch assembly are installed correctly.

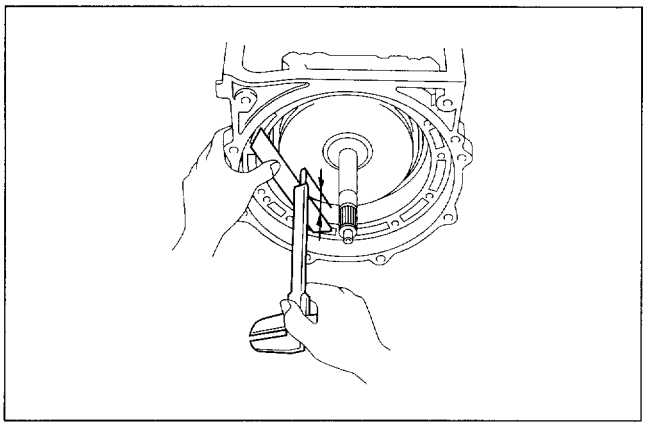

Figure 359. Correct Installation Check

Temporarily Install Oil Pump

1. Coat the race with petroleum jelly, and install it onto the oil pump.
   Race diameter (Reference)

Diameter mm (in.)	Inside	Outside
Race	27.1 (1.067)	43.0 (1.693)
	27.9 (1.098)	43.0 (1.693)
	28.3 (1.114)	43.0 (1.693)

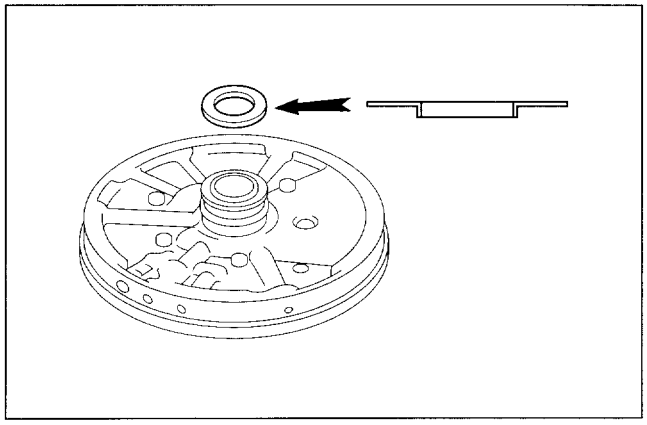

Figure 360. Race Installation

2. Place the gasket on the transmission case.

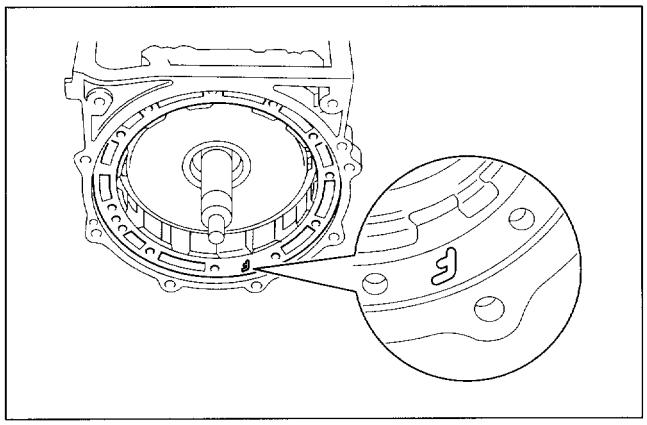

Figure 361. Gasket Installation

3. Align the bolt holes of the pump body and transmission case, and install it.

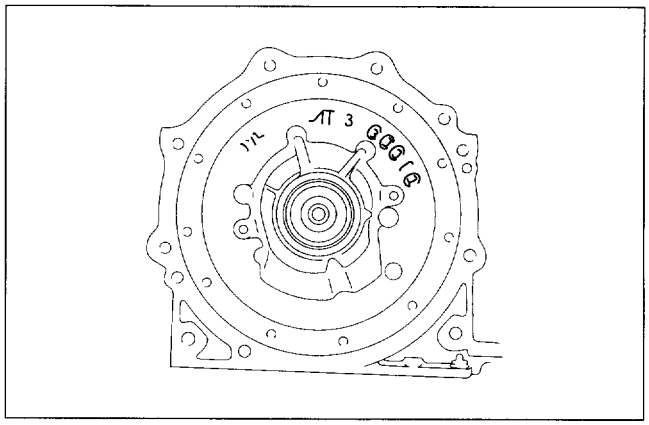

Figure 362. Oil Pump Installation (1)

4. Install a bolt to the matchmarked position, tighten all the 11 bolts temporarily, then tighten them completely a little at a time.

Tighten

Torque: 21 N·m (2.1 kg·m, 15 lb·ft)

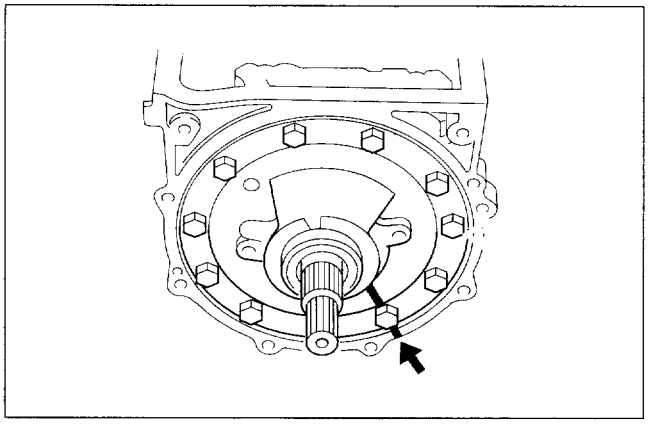

Figure 363. Oil Pump Installation (2)

Thrust Clearance of Overdrive Input Shaft (Overdrive Planetary Gear)

1. Push the O/D input shaft toward the rear of the transmission by applying a force of 49–98 N (5–10 kg, 11.0–22.0 lb).

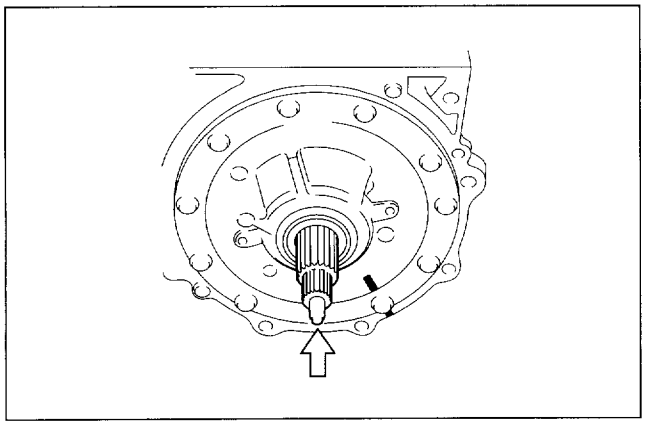

Figure 364. Thrust Clearance Adjustment (1)

2. Using a dial indicator, measure the thrust clearance of the input shaft.
   Standard thrust clearance: 0.40–0.90 mm (0.0157–0.0354 in.)
   Maximum thrust clearance: 0.90 mm (0.0354 in.)
   If the thrust clearance is greater than the maximum, adjust with a race.

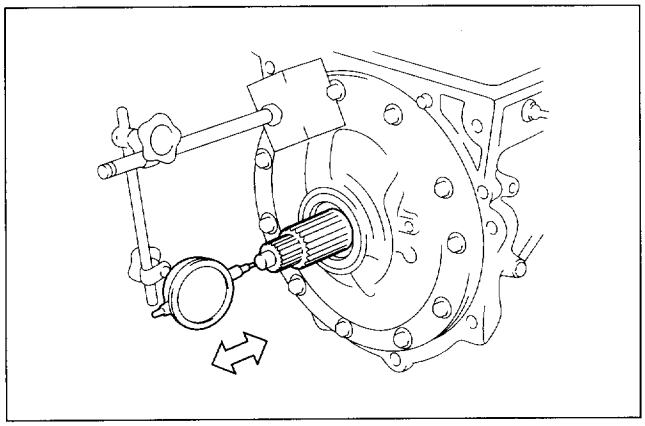

Figure 365. Thrust Clearance Adjustment (2)

3. Remove the 11 oil pump set bolts.

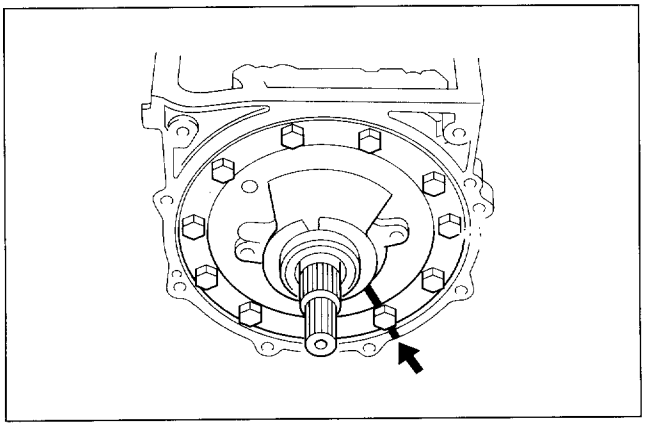

Figure 366. Oil Pump Bolt

4. Using the oil pump remover, remove the oil pump and gasket.
   Tool Required:
   5-8840-2652-0 Oil Pump Remover

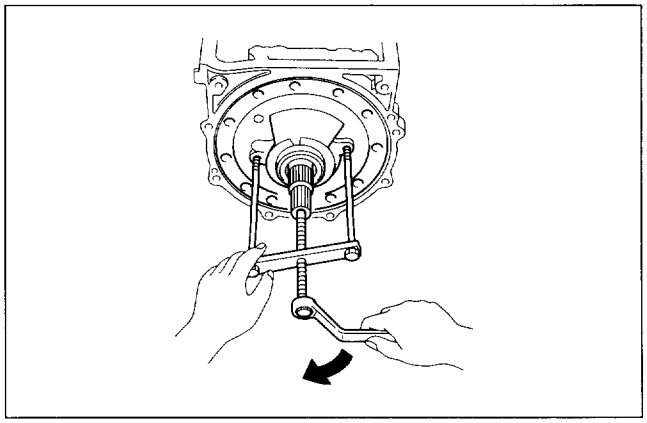

Figure 367. Oil Pump Removal

5. Remove the race from the oil pump cover.
6. Select a race.

Race thicknesses

Thickness mm (in.)	
0.8 (0.031)	1.4 (0.055)
1.0 (0.039)	

7. Coat the race with petroleum jelly, and install it onto the oil pump cover.

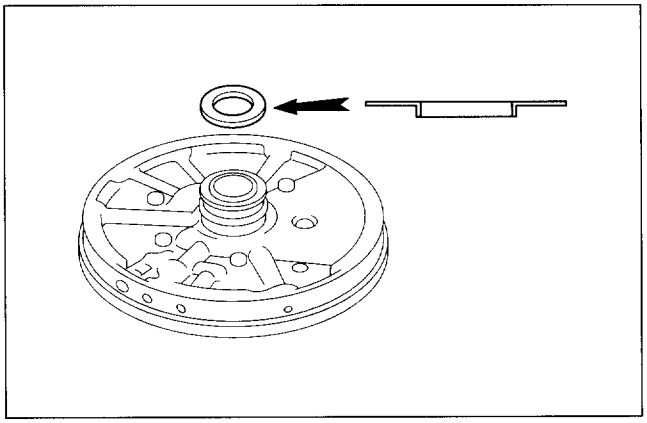

Figure 368. Race Installation

Oil Pump Installation

1. Place a new gasket on the transmission case.

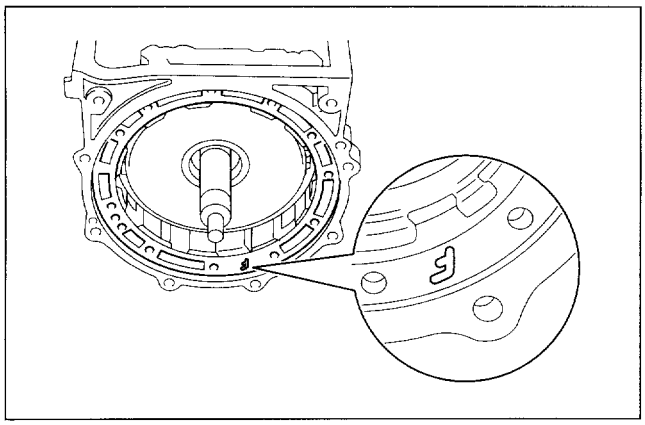

Figure 369. Gasket Installation

2. Align the bolt holes of the pump body and transmission case.

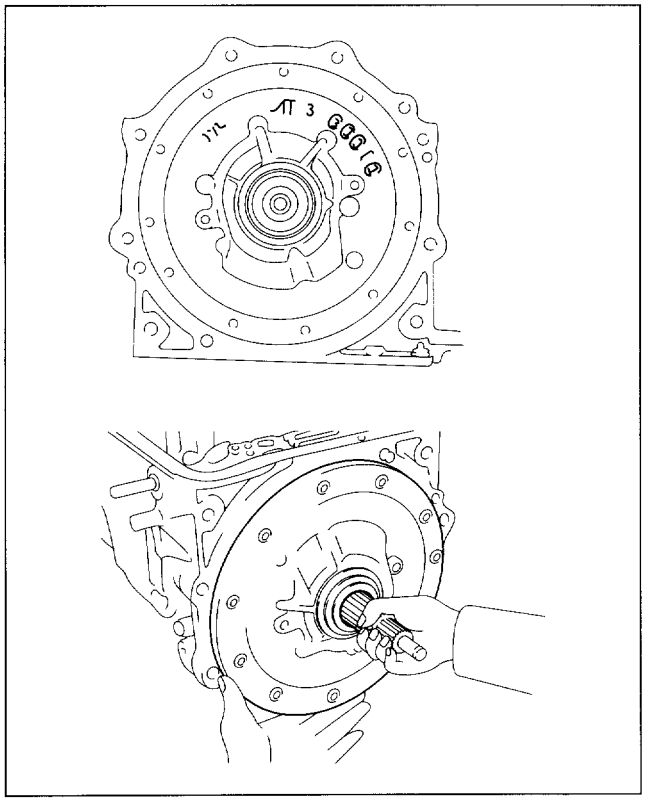

Figure 370. Oil Pump Installation (1)

3. Apply sealant (Three Bond 1344, Loctite 572 or equivalent) to the threads of the oil pump set bolts.

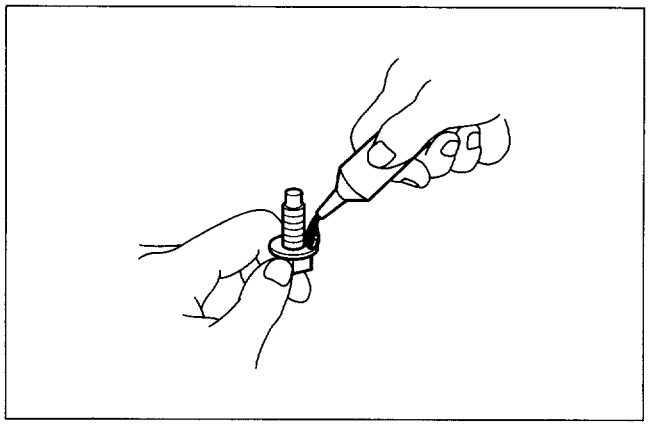

Figure 371. Sealant

4. Install a bolt to the matchmarked position, tighten all the 11 bolts temporarily, then tighten them completely a little at a time.

Tighten

Torque: 21 N·m (2.1 kg·m, 15 lb·ft)

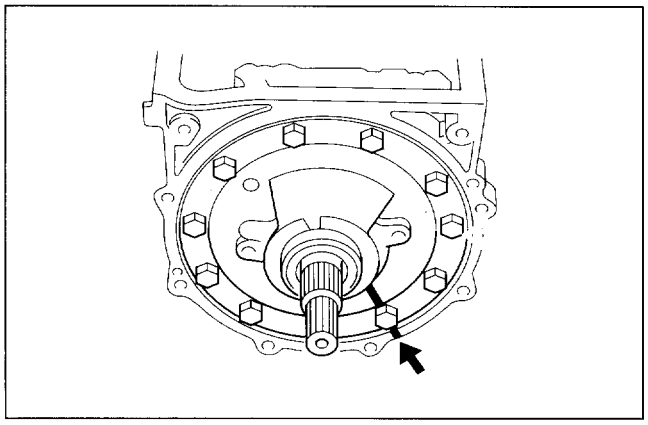

Figure 372. Oil Pump Installation (2)

5. Coat the new 2 O-rings with ATF, and install them to the oil pump body.
NOTICE: Be careful not to damage the O-rings.

O-ring diameters mm (in.)

	Inside	Thickness
O-ring (A)	241.6 (9.512)	3.1 (0.122)
O-ring (B)	250.0 (9.843)	2.7 (0.106)

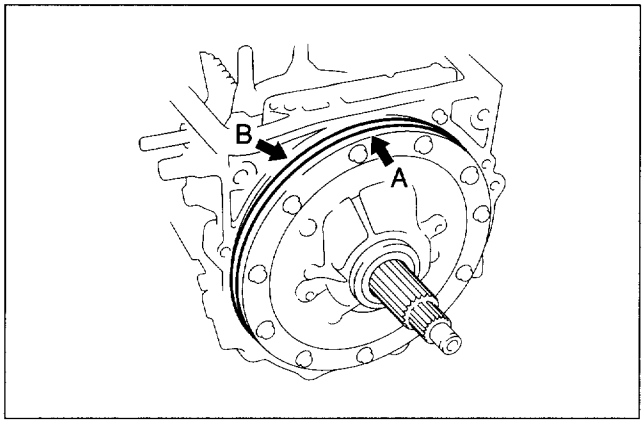

Figure 373. O-ring Installation

Accumulator Springs and Pistons

1. Coat the new 8 O-rings with ATF, and install them to the pistons.
   CAUTION: Be careful not to damage the O-rings.
   O-ring diameter mm (in.)

		Inside	Outside
B-0	A	29.9 (1.177)	2.6 (0.102)
	B	26.1 (1.028)	2.6 (0.102)
B-1	A	37.5 (1.476)	2.6 (0.102)
	B	29.9 (1.177)	2.6 (0.102)
C-1	A	28.5 (1.122)	2.6 (0.102)
	B	22.3 (0.878)	2.6 (0.102)
C-2	A	33.7 (1.327)	2.6 (0.102)
	B	28.5 (1.122)	2.6 (0.102)

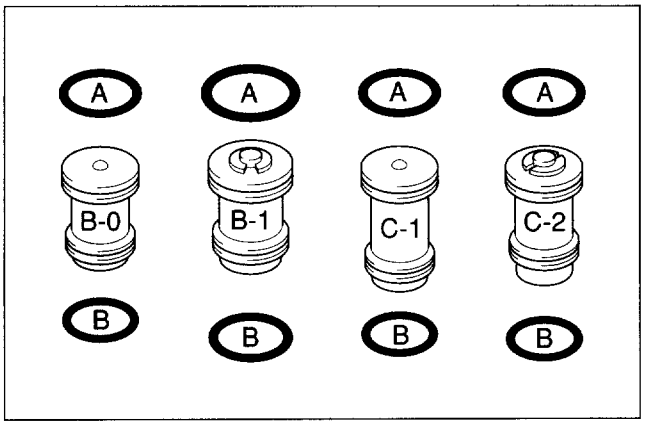

Figure 374. O-ring and Piston

2. Install the spring and accumulator pistons into the bore of the transmission case.
   Spring diameter mm (in.)

	C-1
Free length	93.3 (3.673)
Diameter	17.7 (0.697)
Color	Red

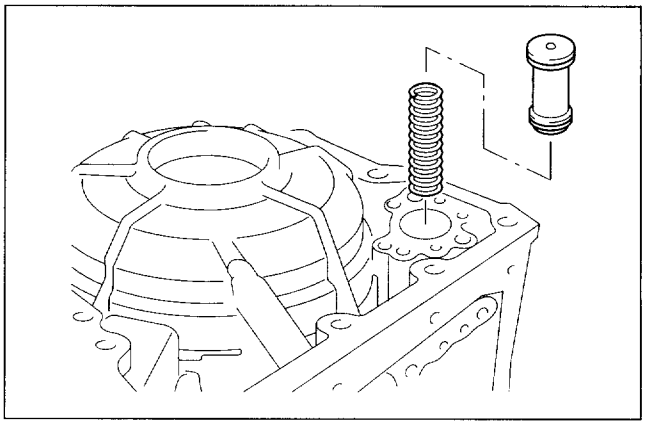

Figure 375. Accumulator Installation (1)

3. Place the new 2 gaskets, plate and accumulator on the transmission case.

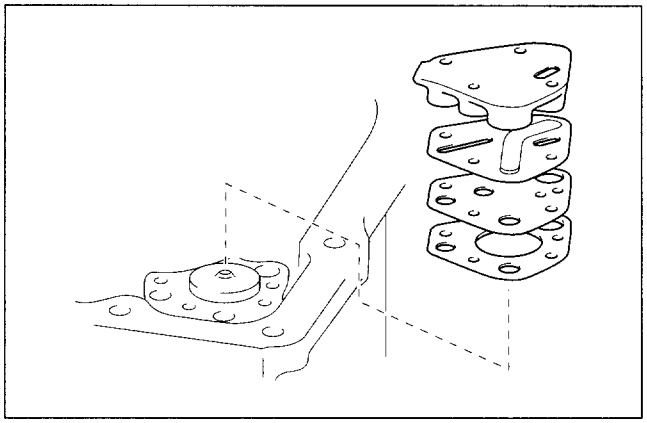

Figure 376. Plate Installation

4. Install the 4 bolts.

   Tighten

   Torque: 8 N·m (80 kg·cm, 69 lb·in)

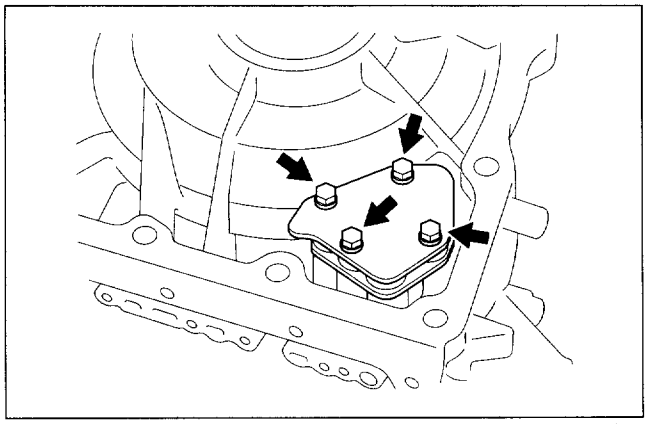

Figure 377. Bolt Installation

5. Install the 4 springs and accumulator pistons into the bore of the transmission case as shown.

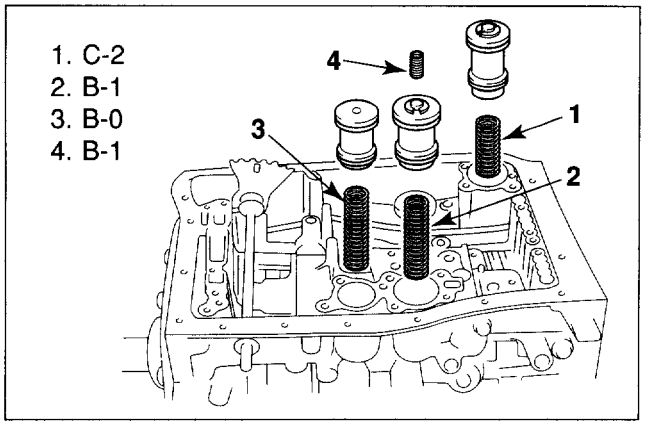

Figure 378. Accumulator Installation (2)

Spring diameter and free length mm (in.)

	Free length	Diameter	Color
B-0	67.9 (2.673)	21.1 (0.831)	White
B-1 (Upper)	30.4 (1.197)	11.0 (0.433)	Yellow
B-1 (Low)	66.0 (2.598)	25.1 (0.988)	Yellow
C-2	81.8 (3.220)	22.4 (0.882)	Beige

Center Support Apply Gasket

Coat the new gaskets with ATF, and install them, facing the pitted side toward the transmission case.

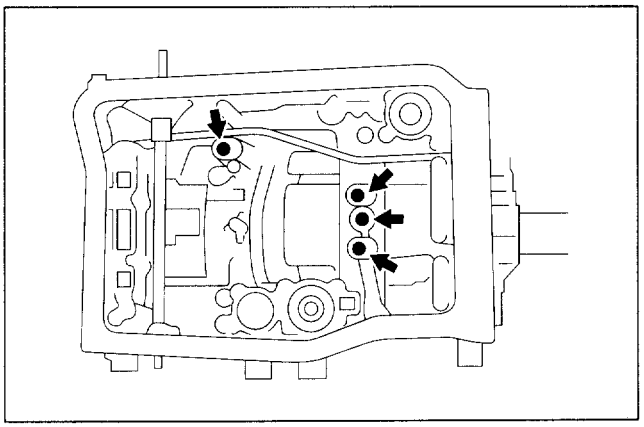

Figure 379. Gasket Installation

Solenoid Wiring

1. Coat a new O-ring with ATF, and install it to the wiring.

O-ring diameter mm (in.)

	Inside dimeter	Thickness
O-ring	17.8 (0.701)	2.4 (0.094)

CAUTION: Be careful not to damage the O-ring.

2. Install the solenoid wiring to the transmission case.

Tighten

Torque: 8 N·m (80 kg·cm, 69 lb·in)

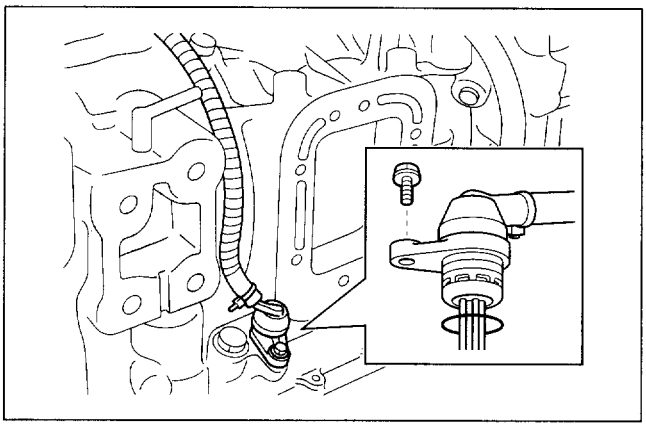

Figure 380. Solenoid Wiring

Valve Body

1. Align the groove of the manual valve with the pin of the manual valve lever.

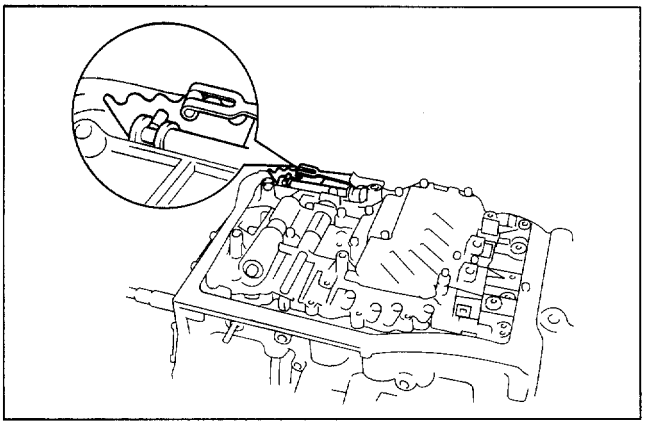

Figure 381. Valve Body Installation

2. Connect the line pressure solenoid connector.

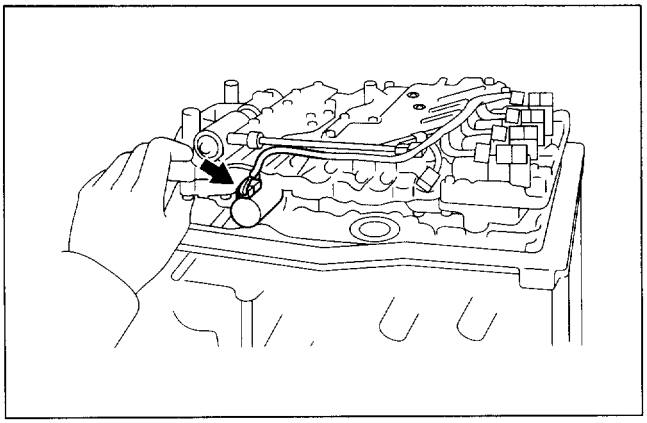

Figure 382. Solenoid Connector

3. Install the 2 bolts indicated by ☆ marks in the illustration and tighten them temporarily.
4. Install and tighten the rest of 19 bolts temporarily, then tighten all of them completely a little at a time.

Tighten

Torque: 10 N·m (1.0 kg·m, 77 lb·in)
NOTICE: Each bolt length is indicated in the illustration.
Bolt length:
A 22 mm (0.87 in.)
B 28 mm (1.10 in.)
C 32 mm (1.26 in.)
D 37.5 mm (1.48 in.)
E 40 mm (1.57 in.)
F 41 mm (1.61 in.)
G 45 mm (1.77 in.)
H 52 mm (2.05 in.)
I 57 mm (2.24 in.)

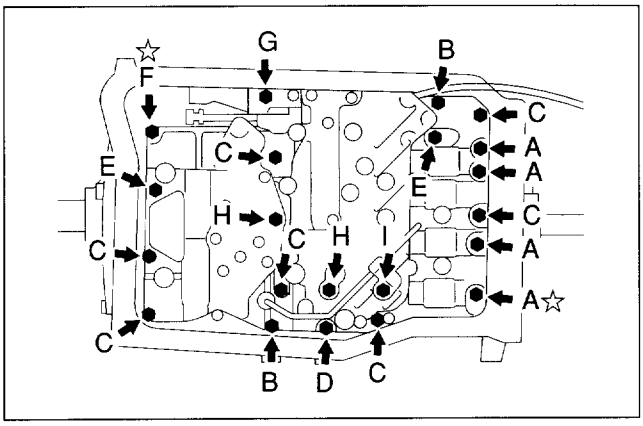

Figure 383. Valve Body Bolt

Solenoid and ATF Thermosensor Connectors
1. Connect the 4 connectors to the solenoids.
2. Connect the connector to the ATF thermosensor.

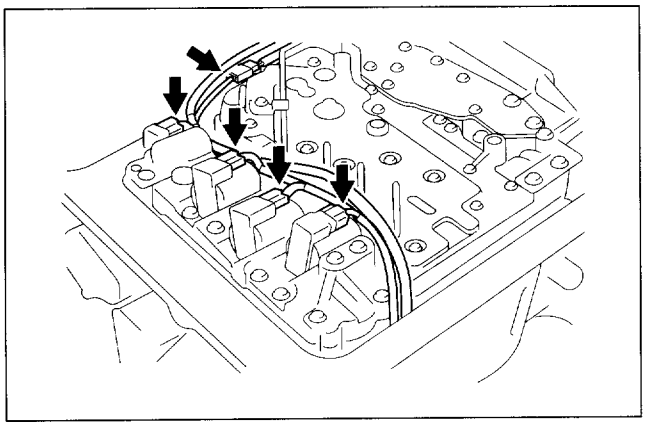

Figure 384. Solenoid Connector

Oil Strainer
Install the oil strainer with the 4 bolts.

Tighten

Torque: 10 N·m (1.0 kg·m, 87 lb·in)
Bolt length:
A 16 mm (0.63 in.)
B 32.4 mm (1.28 in.)

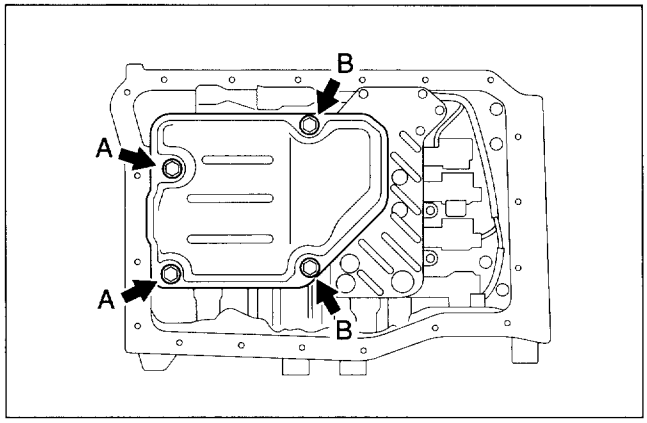

Figure 385. Oil Strainer Installation

Magnet in Pan
Install the 4 magnets in the oil pan as shown in the illustration.

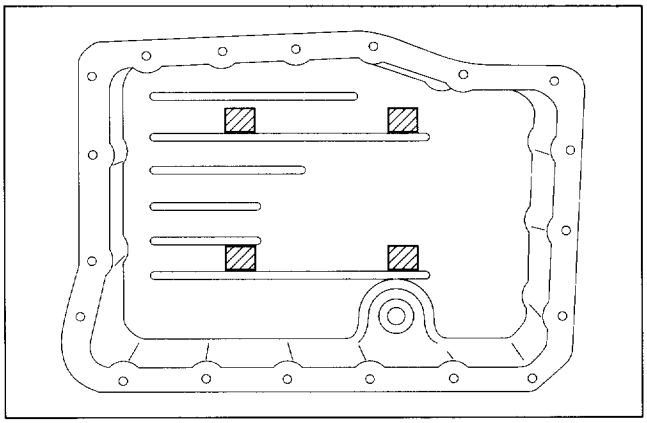

Figure 386. Magnet Installation

Oil Pan
1. Remove any sealants and be careful not to drop oil on the contacting surface of the transmission case and oil pan.
2. Apply sealants (Three Bond 1281 or equivalent) to the oil pan.

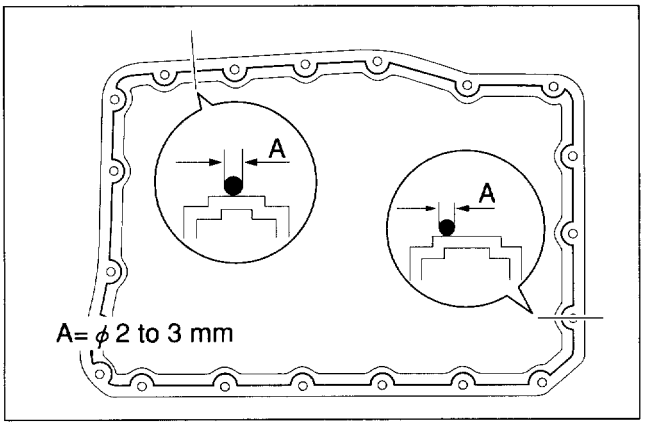

Figure 387. Sealant Application

3. Install and tighten the 20 bolts.

Tighten

Torque: 7 N·m (70 kg·cm, 61 lb·in)

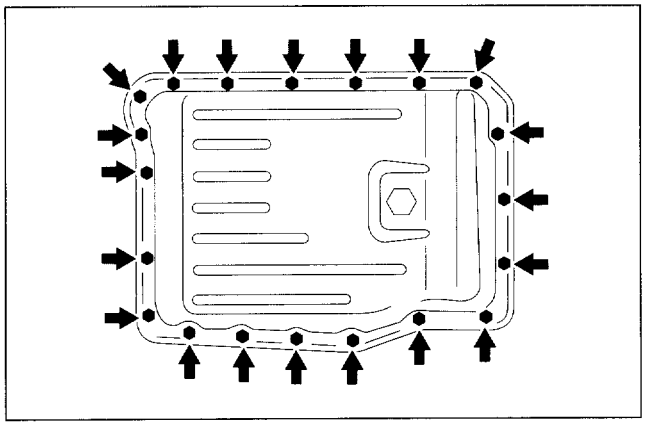

Figure 388. Oil Pan Installation

Torque Converter Housing

1. Install the torque converter housing with the 8 bolts.
   CAUTION: Be careful do not damage the 2 O-rings around the oil pump body when installing the torque converter housing.

Tighten

Torque: 64 N·m (6.5 kg·m, 47 lb·ft)
Bolt length:
A 35 mm (1.38 in.)
B 45 mm (1.77 in.)

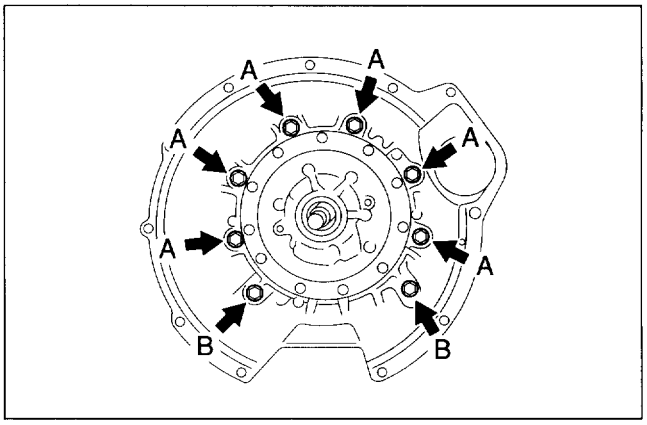

Figure 389. Torque Converter Housing Installation

Transmission PTO Cover

1. Apply sealant (Three Bond 1344, Loctite 572 or equivalent) to the thread of the PTO cover fixing bolt.
2. Install the transmission PTO cover and new gasket with 6 bolts.

Tighten

Torque: 15 N·m (1.5 kg·m, 11 lb·ft)

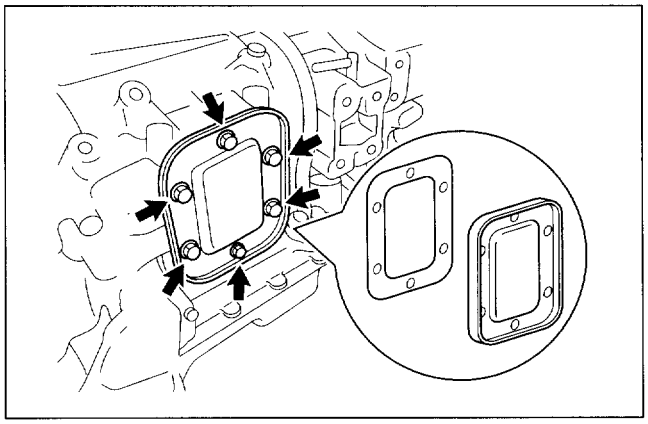

Figure 390. PTO Cover Installation

Vehicle Speed Sensor 1

1. Coat the new O-ring with ATF, and install it to the sensor.
   CAUTION: Be careful not to damage the O-ring.
   O-ring diameter mm (in.)

	Inside	Thickness
O-ring	11.8 (0.465)	1.9 (0.075)

2. Install the speed sensor to the extension housing with the bolt.

Tighten

Torque: 8 N·m (80 kg·cm, 69 lb·in)

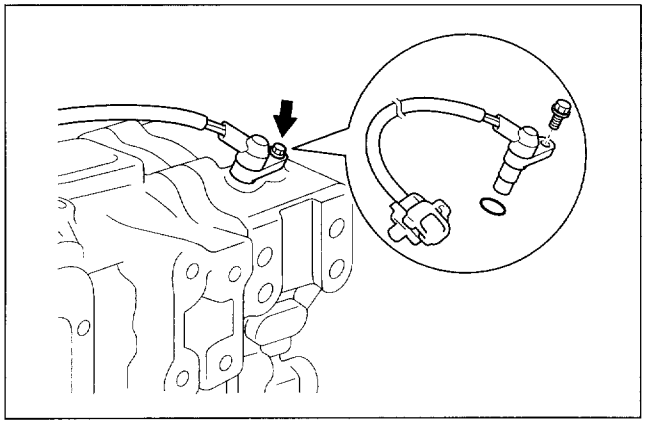

Figure 391. Vehicle Speed Sensor 1 Installation

Transmission Oil Cooler Unions

1. Coat the new 2 O-rings with ATF, and install them to each union.
   CAUTION: Be careful not to damage to the O-rings.
   O-ring diameters mm (in.)

	Inside	Wire diameter
O-rings	11.6 (0.457)	2.0 (0.079)

2. Install the 2 unions.

Tighten

Torque: 32 N·m (3.3 kg·m, 24 lb·ft)

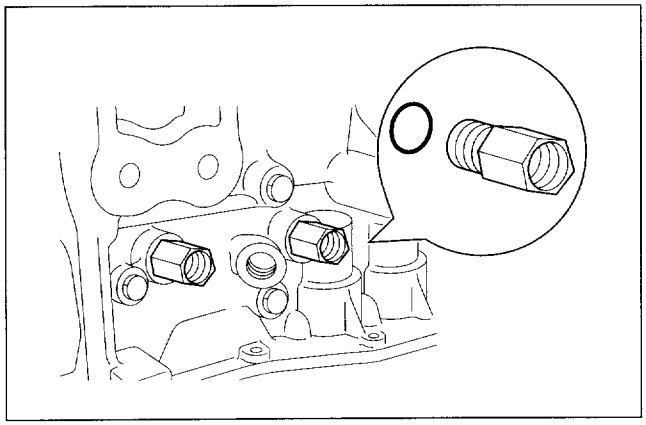

Figure 392. Cooler Union Installation

ATF Temperature Switch

1. Coat the new O-ring with ATF, and install it to the switch.
   CAUTION: Be careful not to damage to the O-ring.
   O-ring diameters mm (in.)

	Inside	Wire diameter
O-ring	13.8 (0.543)	1.9 (0.075)

2. Install the sensor to the transmission case.

Tighten

Torque: 25 N·m (2.5 kg·m, 18 lb·ft)

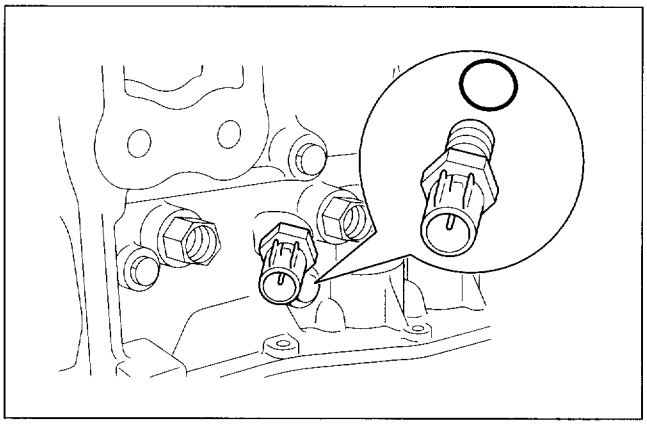

Figure 393. ATF Temerature Switch Installation

Inhibitor Switch

1. Temporarily install the inhibitor switch with the 2 bolts.
2. Install the gasket, a new lock washer and the nut.

Tighten

Torque: 7 N·m (70 kg·cm, 61 lb·in)

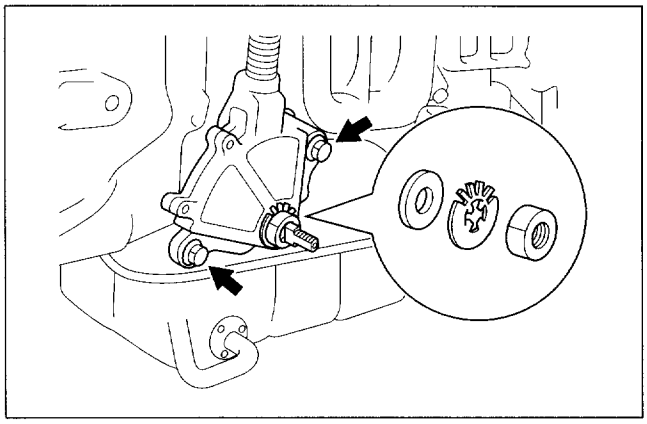

Figure 394. Inhibitor Switch Installation

3. Using a screwdriver, bend the tabs of the lock washer.
   NOTICE: Bend at least 2 of the lock washer tabs.

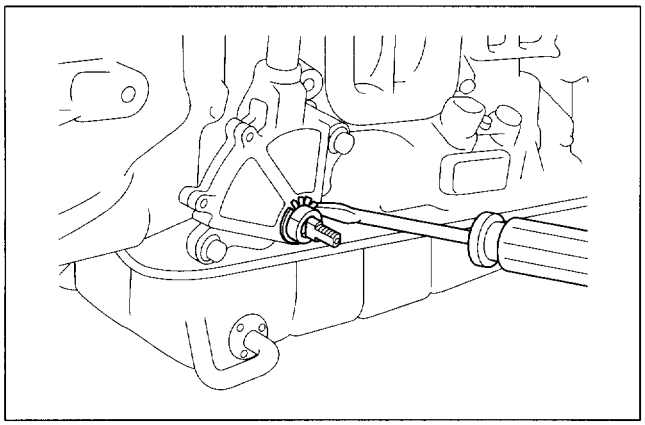

Figure 395. Lock Washer

4. Using the control shaft lever, fully turn the control shaft lever back and return 2 notches, it is now in neutral position.
5. Remove the control shaft lever.

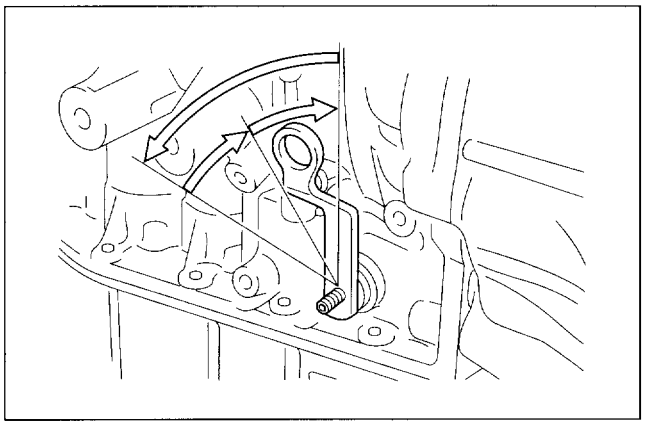

Figure 396. Control Shaft Lever

6. Align the neutral basic line with the switch groove and tighten the 2 bolts.

Tighten

Torque: 13 N·m (1.3 kg·m, 113 lb·in)

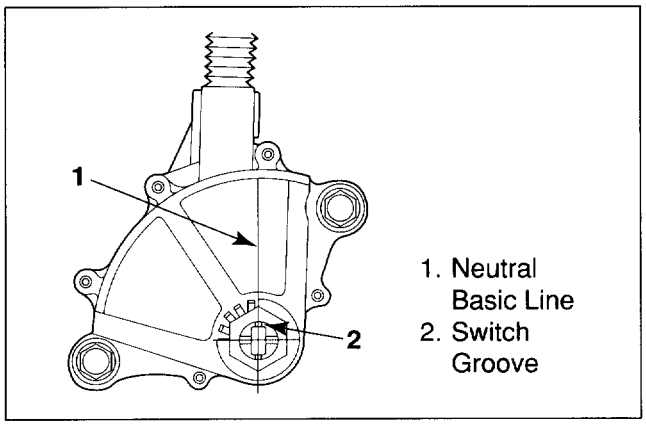

Figure 397. Newtral Basic Line

Control Shaft Lever

Tighten

Torque: 13 N·m (1.3 kg·m, 113 lb·in)

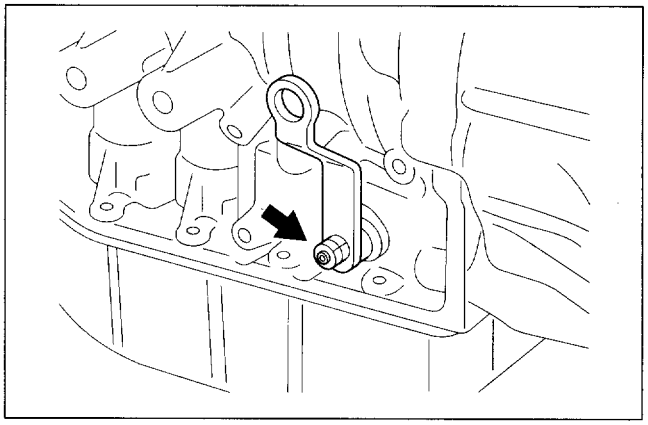

Figure 398. Control Shaft Lever

Breather Plug and Hose

1. Coat a new O-ring with ATF, and install it to breather plug.
2. Install the breather plug and hose.

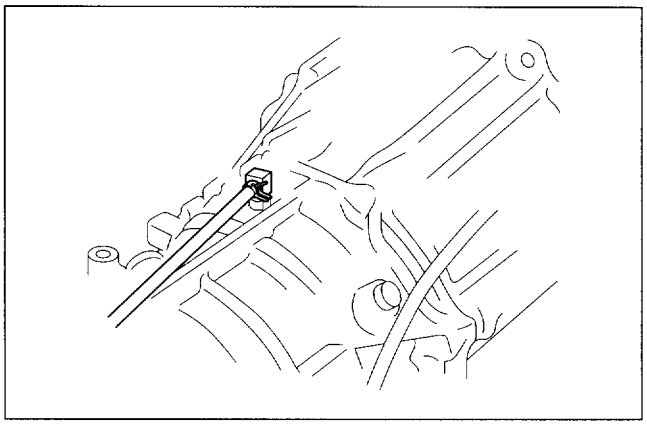

Figure 399. Breather Plug

Speedometer Driven Gear Assy

1. Coat the new O-ring with ATF, and install it to the speedometer sleeve.
   CAUTION: Be careful not to damage the O-ring.

O-ring diameter mm (in.)

	Inside	Wire diameter
O-ring	18.7 (0.736)	2.6 (0.102)

2. Install the speedometer driven gear to the speedometer sleeve with the clip.
3. Install the speedometer driven gear assembly to the extension housing with the bolt.

Tighten

Torque: 12 N·m (1.2 kg·m, 104 lb·in)

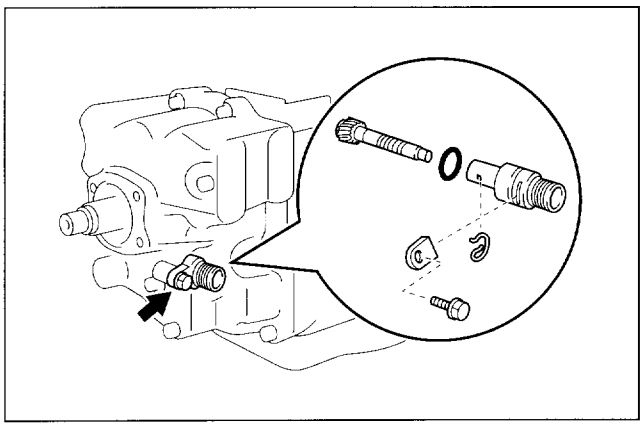

Figure 400. Speedometer Driven Gear Installation

SPECIFICATIONS

SERVICE DATA

Oil Pump	Pump body bushing inside diameter		STD	42.050 to 42.075 mm	1.6555 to 1.6565 in.
			Limit	42.13 mm	1.6587 in.
	Pump cover bushing inside diameter	Front	STD	24.000 to 24.021 mm	0.9449 to 0.9457 in.
			Limit	24.070 mm	1.9476 in.
		Rear	STD	26.500 to 26.521 mm	1.0433 to 1.0441 in.
			Limit	26.57 mm	1.0461 in.
O/D Planetary Gear and Direct Clutch	O/D input shaft thrust clearance (O/D planetary gear)		STD	0.40 to 0.90 mm	0.0157 to 0.0354 in.
			Limit	0.90 mm	0.0345 in.
	O/D input shaft thrust bearing race thickness			0.8 mm	0.031 in.
				1.0 mm	0.039 in.
				1.4 mm	0.055 in.
	O/D direct clutch flange thickness			4.6 mm	0.181 in.
				4.77 mm	0.188 in.
				4.94 mm	0.194 in.
				5.11 mm	0.201 in.
	Piston stroke			1.80 to 2.00 mm	0.0709 to 0.0787 in.
	O/D direct clutch drum bushing inside diameter		STD	26.500 to 26.521 mm	1.0433 to 1.0441 in.
			Limit	26.57 mm	1.0461 in.
	O/D planetary gear bushing inside diameter		STD	12.000 to 12.018 mm	0.4724 to 0.4731 in.
			Limit	12.07 mm	0.4752 in.
	Planetary piston gear thrust clearance		STD	0.20 to 0.59 mm	0.0079 to 0.0232 in.
			Limit	0.80 mm	0.315 in.
O/D Brake	Piston stroke			1.25 to 1.85 mm	0.0492 to 0.0728 in.
	O/D case bushing inside diameter		STD	33.100 to 33.150 mm	1.3031 to 1.305 in.
			Limit	32.20 mm	1.3071 in.
Front Clutch	Input shaft thrust clearance (forward clutch hub)		STD	0.30 to 0.70 mm	0.0118 to 0.0276 in.
			Limit	0.70 mm	0.0276 in.
	Input shaft spacer thickness			0.9 mm	0.035 in.
				1.2 mm	0.047 in.
				1.5 mm	0.059 in.
				1.8 mm	0.071 in.
				2.1 mm	0.083 in.
	Piston stroke			3.93 to 4.23 mm	0.1547 to 0.1665 in.
	Front clutch plate thickness			1.8 mm	0.071 in.
				2.0 mm	0.079 in.
				2.2 mm	0.084 in.
				2.4 mm	0.094 in.

Rear Clutch	Piston stroke		2.00 to 2.20 mm	0.0790 to 0.0866 in.
	Rear clutch flange thickness		4.6 mm	0.181 in.
			4.8 mm	0.189 in.
			5.0 mm	0.197 in.
			5.2 mm	0.205 in.
Second Brake	Center support thrust clearance	STD	0.30 to 0.70 mm	0.0118 to 0.0276 in.
		Limit	0.90 mm	0.0345 in.
	Center support thrust washer thickness		1.5 mm	0.059 in.
			1.8 mm	0.071 in.
			2.1 mm	0.083 in.
			2.4 mm	0.094 in.
			2.7 mm	0.106 in.
	Piston stroke		1.86 to 2.06 mm	0.0732 to 0.0811 in.
	Center support bushing inside diameter	STD	35.000 to 35.025 mm	1.3780 to 1.3789 in.
		Limit	35.08 mm	1.3811 in.
	Front planetary sun gear bushing inside diameter	STD	25.500 to 25.521 mm	1.0039 to 1.0048 in.
		Limit	25.57 mm	1.0067 in.
	Second brake flange thickness		5.0 mm	0.197 in.
			5.2 mm	0.205 in.
			5.4 mm	0.213 in.
			5.6 mm	0.220 in.
Planetary Gears, One-way Clutch and Output Shaft	Output shaft bushing inside diameter	STD	17.000 to 17.021 mm	0.6693 to 0.6701 in.
		Limit	17.07 mm	0.6720 in.
	Planetary pinion gear thrust clearance	STD	0.20 to 0.59 mm	0.0079 to 0.0232 in.
		Limit	0.75 mm	0.0295 in.
First and Reverse Brake	Piston stroke		3.3 to 3.8 mm	0.130 to 0.150 in.
	First and reverse brake flange thickness		6.65 mm	0.2618 in.
			7.05 mm	0.2776 in.
			7.45 mm	0.2933 in.
Parking Lock Pawl	Parking lock pawl bracket distance		49.76 to 49.86 mm	1.959 to 1.963 in.
Upper Valve Body	Check ball diameter		6.4 mm	0.252 in.
Lower Valve Body	Check ball diameter		8.7 mm	0.343 in.
	Check ball spring	Free length	14.0 mm	0.551 in.
		Outer diameter	9.8 mm	0.386 in.
	Pressure relief valve spring	Free length	24.0 mm	0.945 in.
		Outer diameter	8.2 mm	0.323 in.

Pistons and Springs Specifications

Mark	Piston diameter mm (in.)	Spring Free length / Outer Diameter mm (in.)	Spring Color
B_0	35.9 (1.413)	67.9 / 21.1 (2.673 / 0.831)	White
B_1	43.9 (1.728)	66.0 / 25.1 (2.598 / 0.988)	Yellow
		30.4 / 11.0 (1.197 / 0.433)	Yellow
C_1	34.4 (1.354)	93.3 / 17.7 (3.673 / 0.697)	Red
C_2	39.9 (1.571)	81.8 / 22.4 (3.220 / 0.882)	Beige

FASTENER TORQUES

Part tightened	N·m	lb·ft (lb·in)	kg·m (kg·cm)
Oil Pump cover x Oil pump body	21	15	2.1
Upper valve body x Lower valve body	5.5	4	55
Manual detent spring x Lower valve body	5.5	(47)	(55)
Parking lock pawl bracket x Extension housing	19	14	1.9
C_1 accumulator cover x Transmission case	8	(69)	(80)
Transmission case x Extension housing	37	27	3.8
Center support set bolt	25	18	2.5
Oil pan x Transmission case	7	(61)	(70)
Transmission case x Transmission housing	64	47	6.5
ATF temperature sensor x Transmission case	25	18	2.5
Oil cooler union x Transmission case	29	22	3.0
Inhibitor switch x Transmission case	12.5	(78)	(130)
Inhibitor switch x Manual valve shaft	7	(61)	(70)
Control shaft x Transmission case	12.5	(78)	(130)
Oil pump x Transmission case	25	18	2.5
Valve body x Transmission case	10	(87)	1.0
Solenoid valve x Valve body	10	(87)	1.0
Oil strainer x Valve body	10	(87)	1.0
Drain plug x Oil pan	27	20	2.8
Speedometer sleeve lock plate x Transmission case	12.5	(78)	(130)
Speed sensor x Transmission case	8	(69)	(80)
Solenoid wire x Transmission case	8	(69)	(80)
PTO cover x Transmission case	15	11	1.5

SPECIAL TOOLS

ILLUSTRATION	**TOOL NO.** TOOL NAME
	5-8840-2153-0 **(J-37228)** Oil Pan Seal Cutter
	5-8840-2641-0 **(J-44160)** No.2 Piston Spring Compressor
	5-8840-2642-0 **(J-44161)** No.3 Piston Spring Compressor
	5-8840-2643-0 **(J-44162)** No.1 Piston Spring Compressor
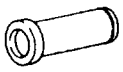	**5-8840-2644-0** **(J-44163)** Oil Pump Oil Seal Installer
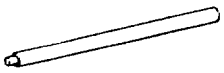	**5-8840-2645-0** **(J-44164)** Handle
	5-8840-2646-0 **(J-44165)** Rear Bearing Installer

ILLUSTRATION	**TOOL NO.** TOOL NAME
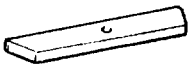	**5-8840-2647-0** **(J-44166)** Plate
	5-8840-2649-0 **(J-44167)** No.1 Measure Termial
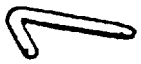	**5-8840-2650-0** **(J-44168)** No.2 Measure Termial
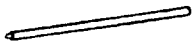	**5-8840-2651-0** **(J-44169)** Extension Bar
	5-8840-2652-0 **(J-44170)** Oil Pump Remover
	5-8840-2653-0 **(J-44171)** Lever Shaft Oil Seal Installer

LG450-WE-9991

You are requested to order this manual using the manual number that is shown above.

This manual is applicable for vehicles in all countries except USA and Canada.

All rights reserved. This manual may not be reproduced in whole or in part, without the permission in writing of ISUZU MOTORS LIMITED

Issued by

ISUZU MOTORS LIMITED

INTERNATIONAL SERVICE DEPARTMENT

Tokyo,Japan

First edition Jan., 1999 9901-01N-3

NO.LG450-WE-9991 PRINTED IN JAPAN